AH-64D Apache

1/48 scale detail set for Hasegawa kit •sada detailů pro model 1/48 Hasegawa

eduard

49 201

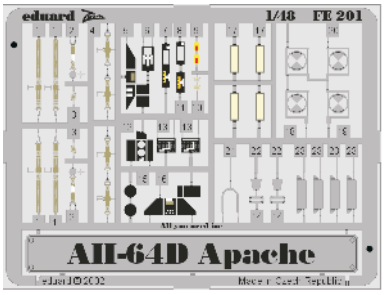

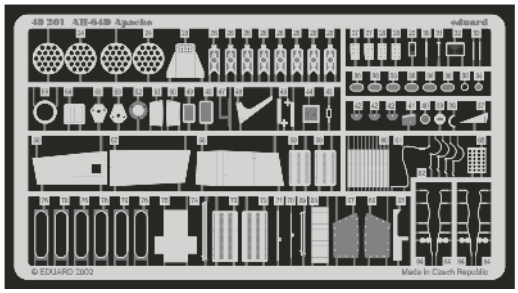



PRINT

- SYMETRICAL ASSEMBLY / SYMETRICKÁ MONTÁ
- REMOVE / ODSTRANIT
- BEND / OHNOUT
- REPLACE / NAHRADIT
- GRIND / OBROUSIT
- OPTION / VOLBA

ORIGINAL KIT PARTS / PŮVODNÍ DÍLY STAVEBNICE

PHOTO-ETCHED PARTS / LEPTANÉ DÍLY

PARTS TO BE REMOVED / DÍLY K ODSTRANĚNÍ

FILL / TMELIT

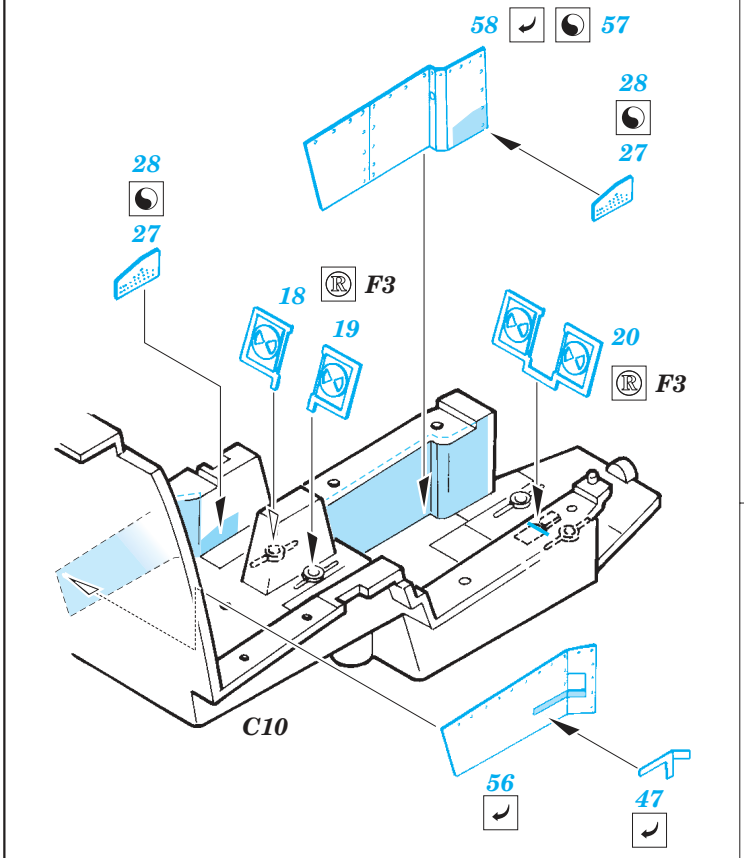

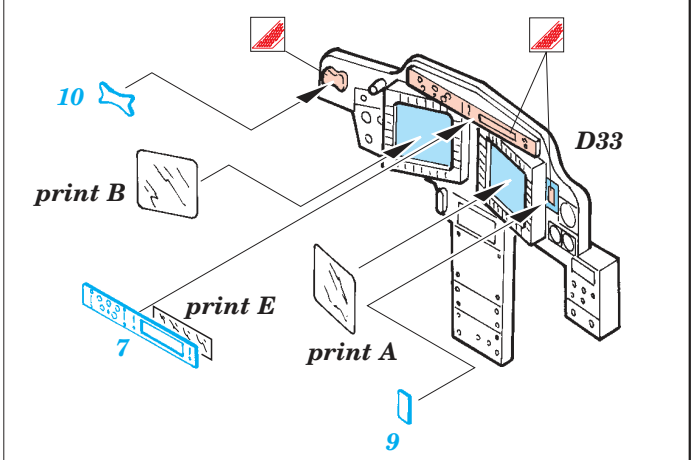

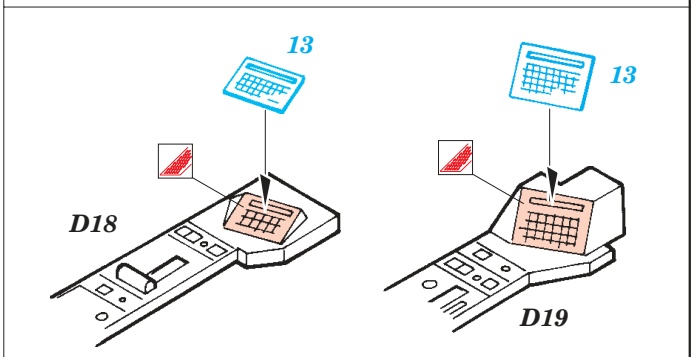

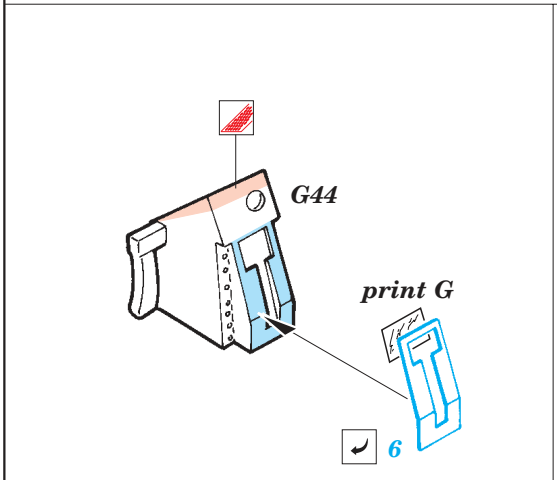

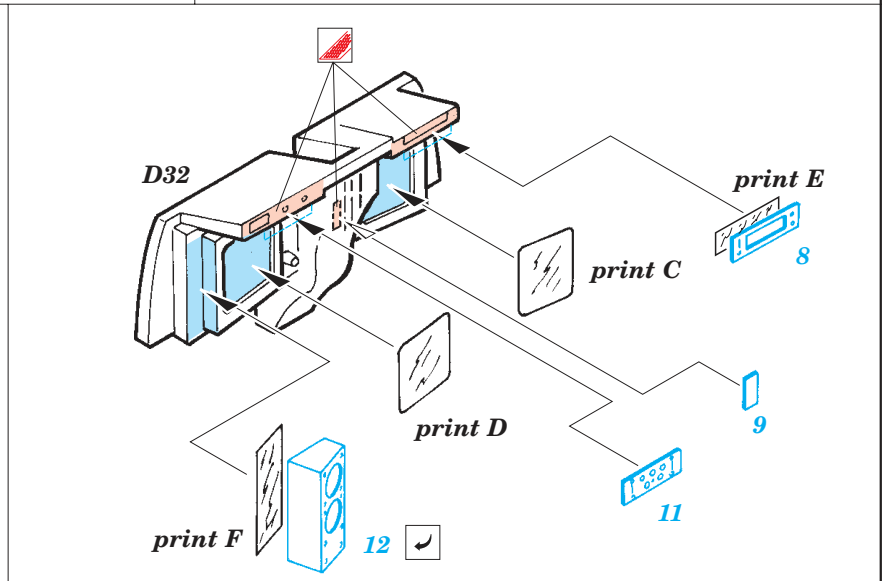

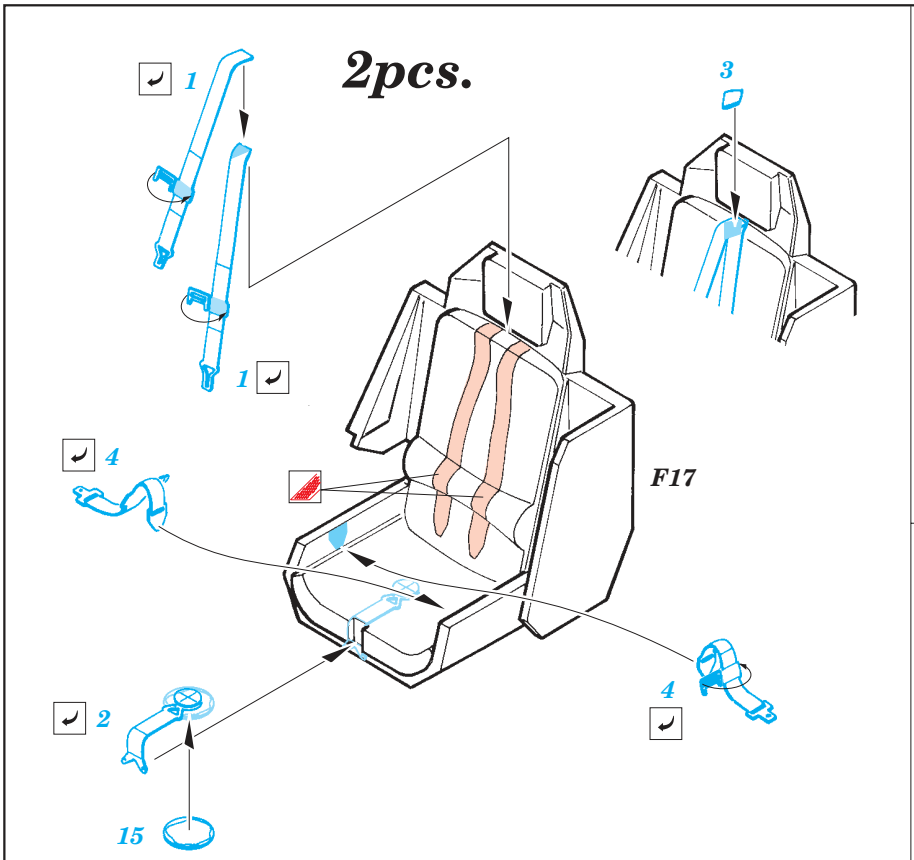
2pcs.
1
1
3
4
F17
4
2
15

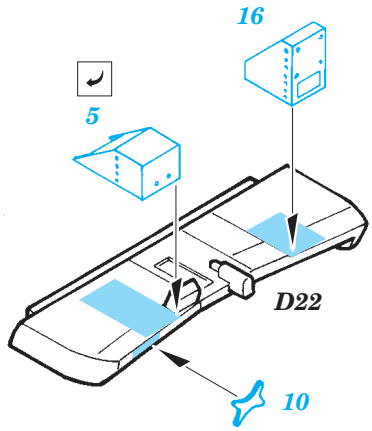
16
5
D22
10

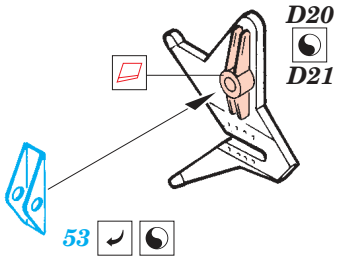
D20
D21
53

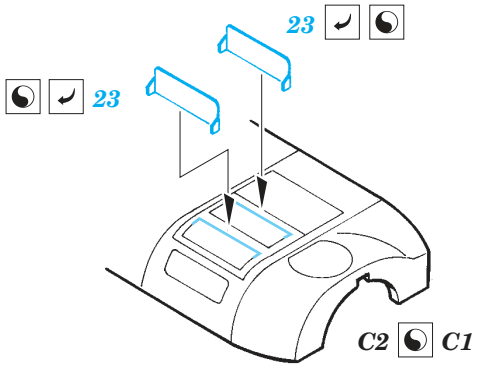
23
23
C2
C1

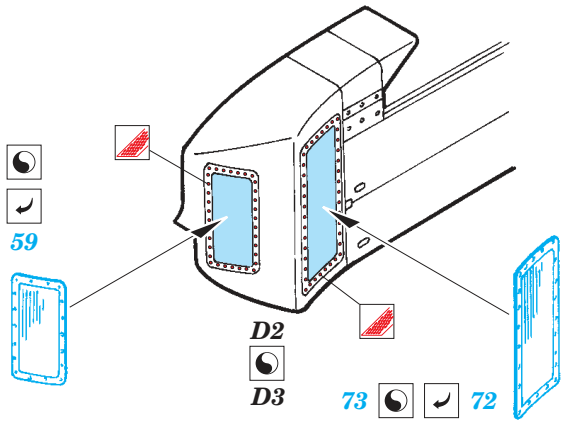
59
D2
D3
73
72

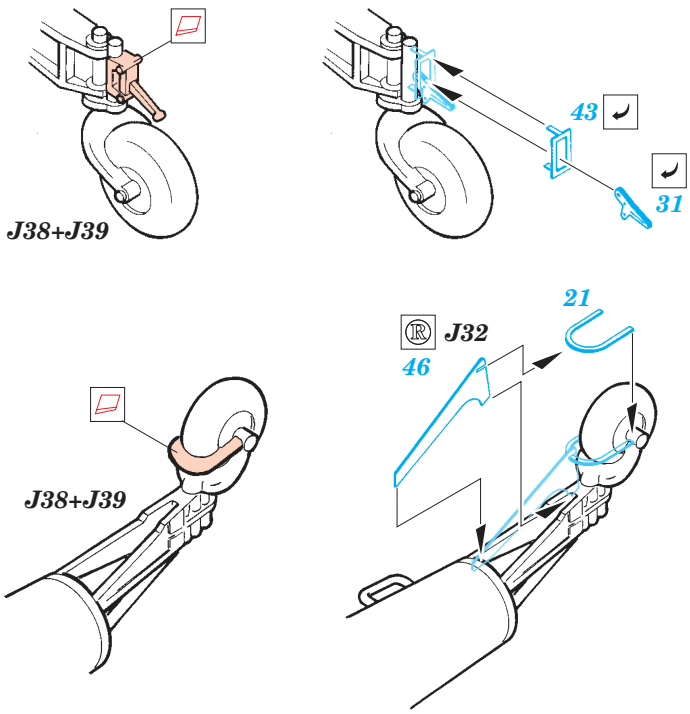
J38+J39
43
31
J38+J39
21
J32
46

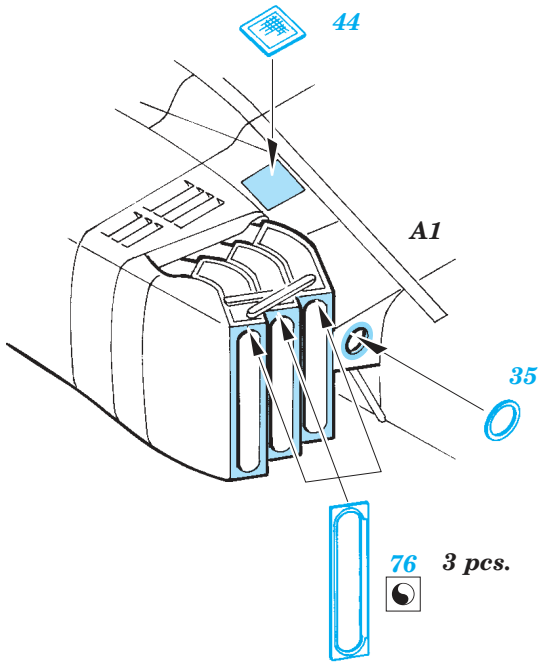
44
A1
35
76
3 pcs.

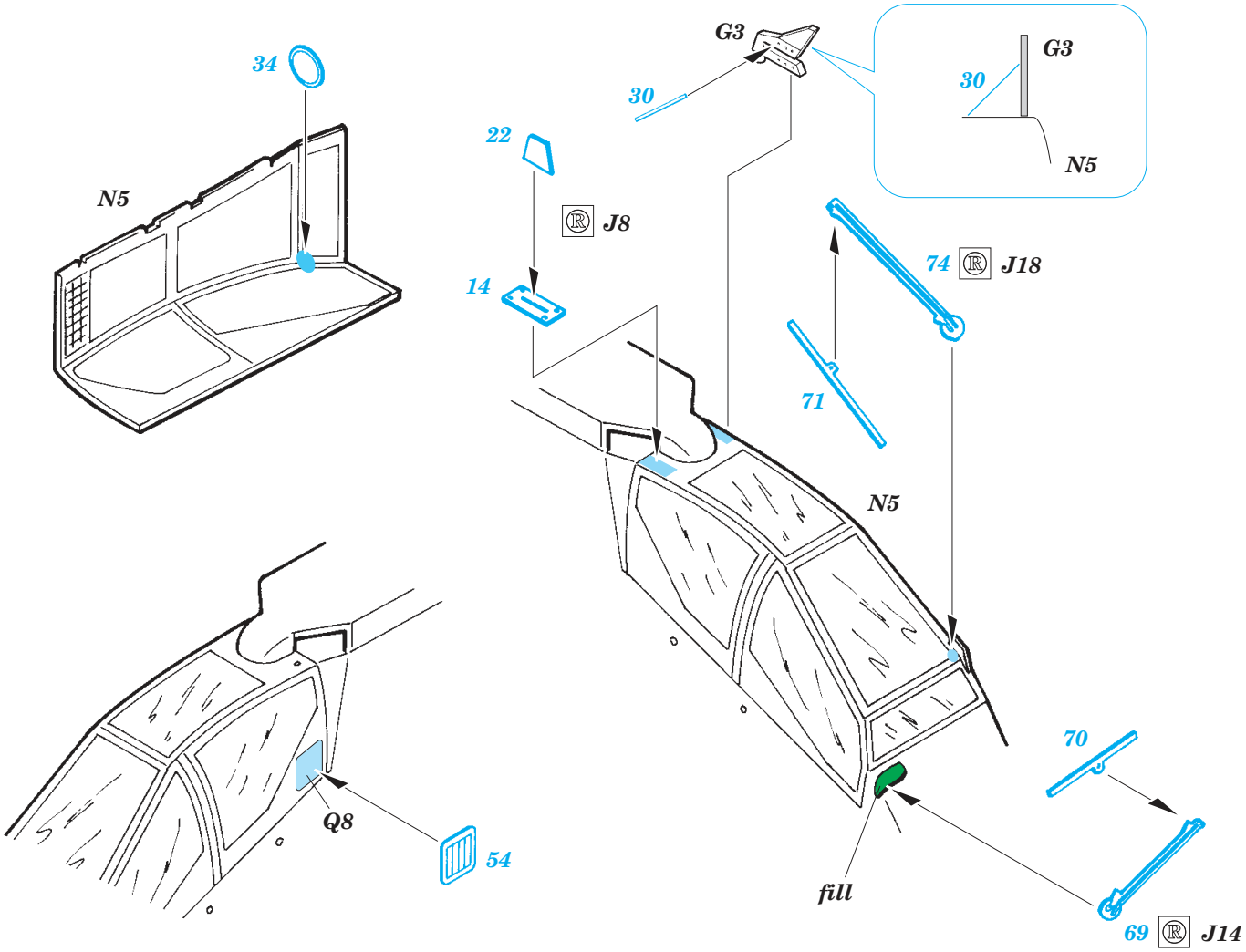
34
N5
G3
30
22
J8
14
G3
30
N5
74
J18
71
N5
70
fill
69
J14
Q8
54

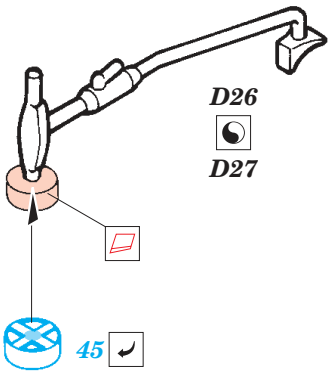
D26
D27
45

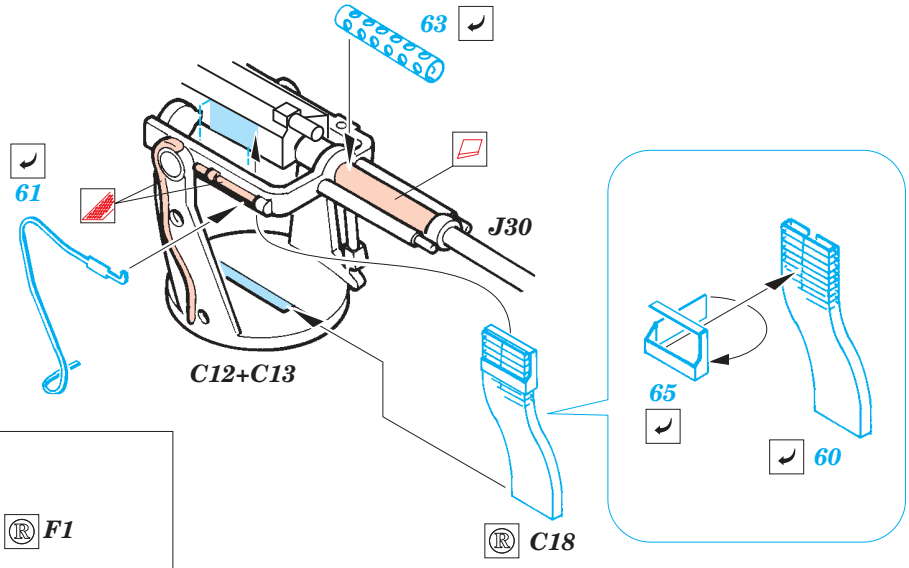
63
61
J30
C12+C13
65
60
C18

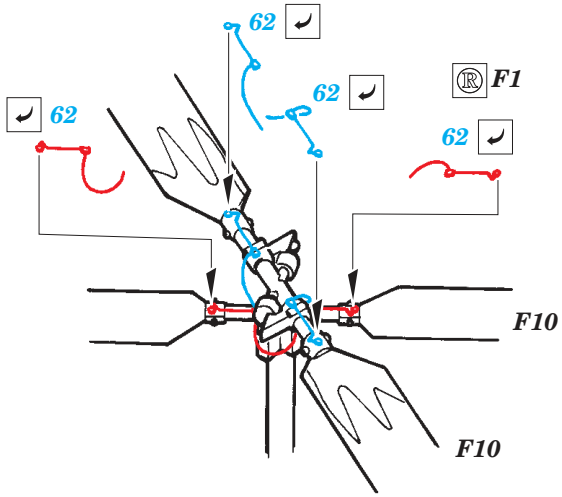
62
62
62
62
F1
F10
F10

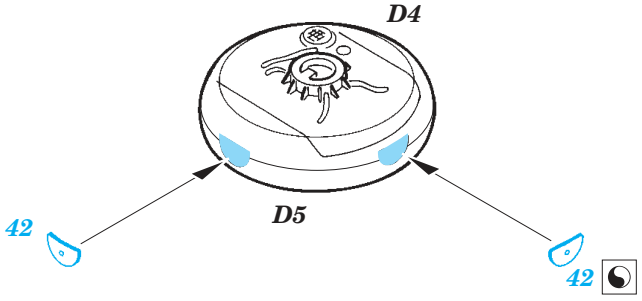
D4
D5
42
42

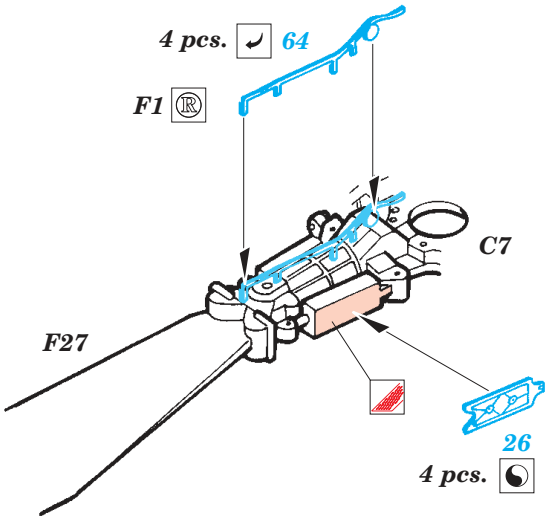
4 pcs. 64
F1
C7
F27
26
4 pcs.

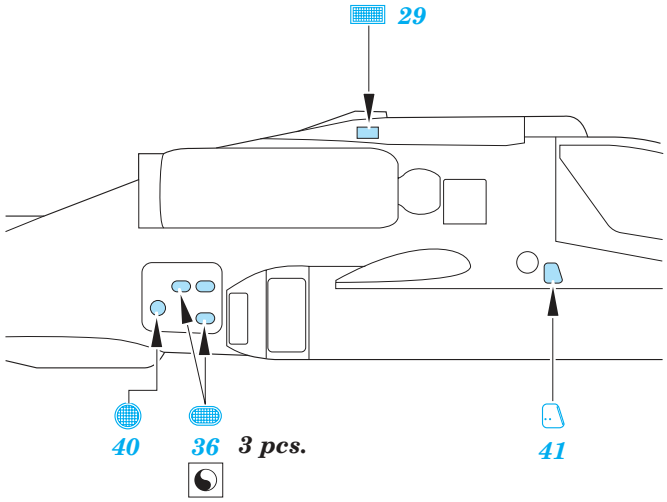
29
40
36
3 pcs.
41

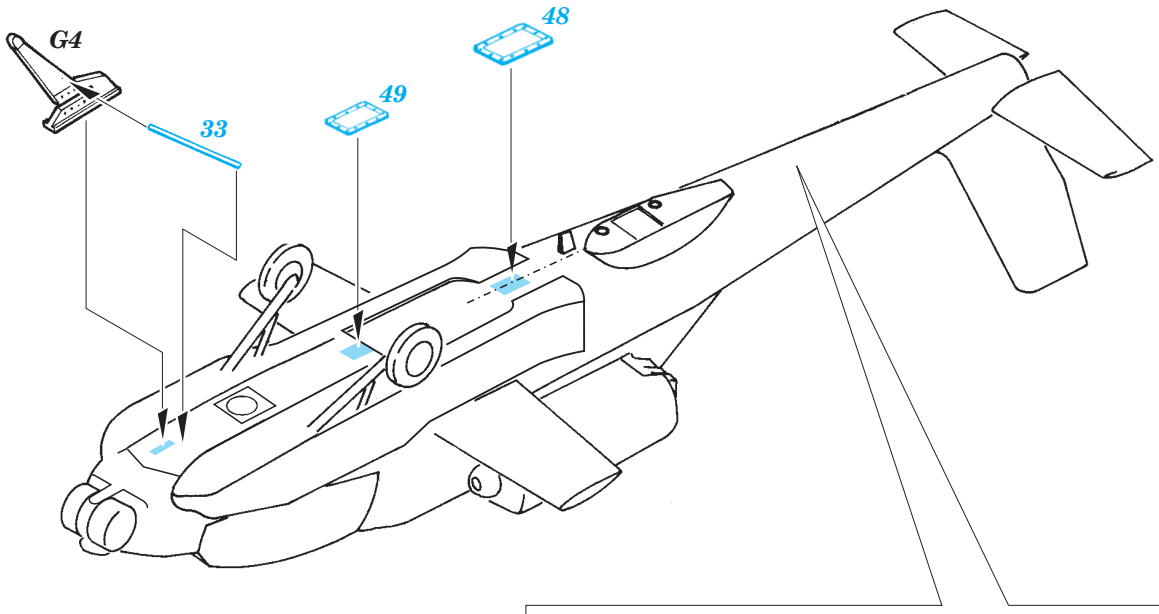
G4
33
49
48

2 pcs.

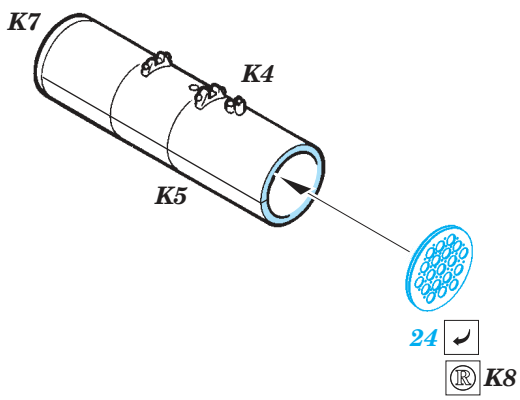
K7
K4
K5
24
K8

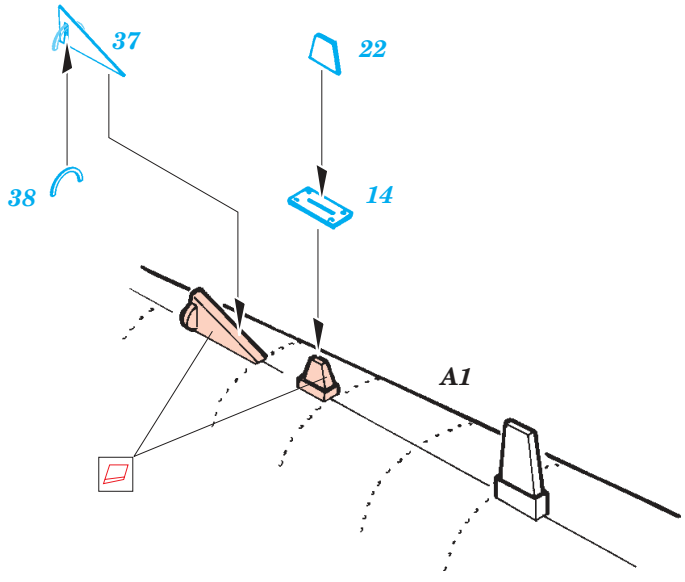
37
22
38
14
A1

IMPROVED VERSION ONLY

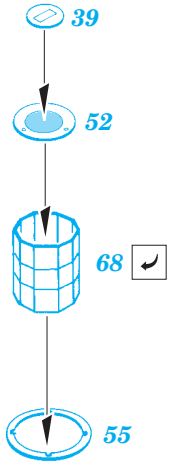

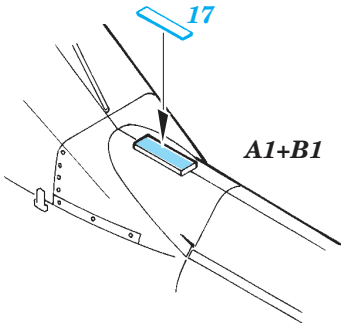

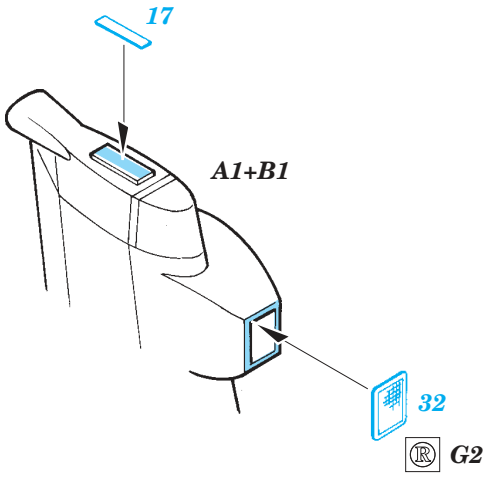

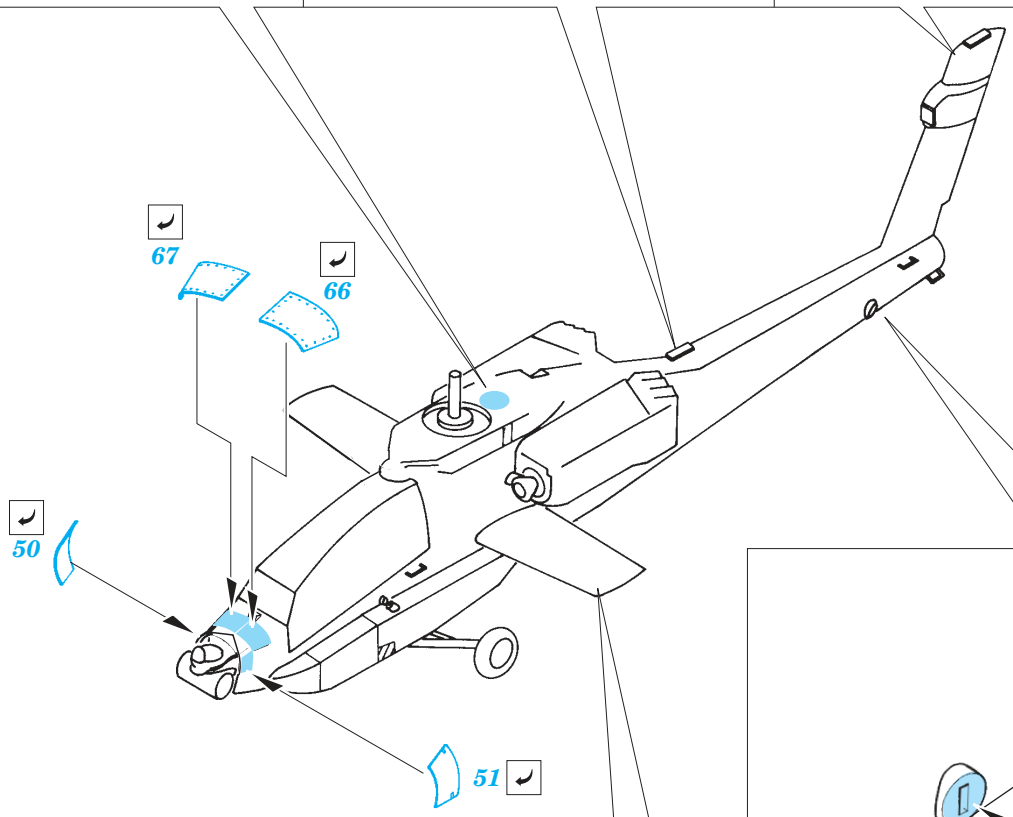

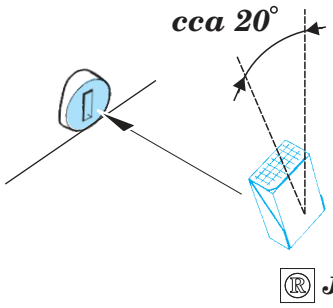

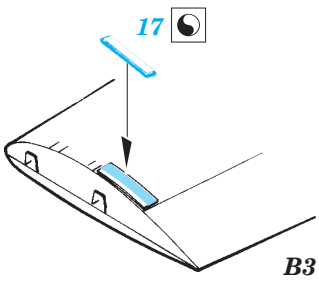

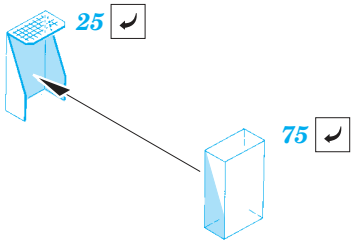

REFERENCES: Verlinden Publ. #13 - AH-64A Apache
Militaria in detail - Modern Attack Helicopters

© EDUARD M.A. 2002