USS Arizona 1/350

eduard

53 016

1/350 scale detail set for MiniHobbyModels No.80607 • sada detailů pro model 1/350 MiniHobbyModels 80607

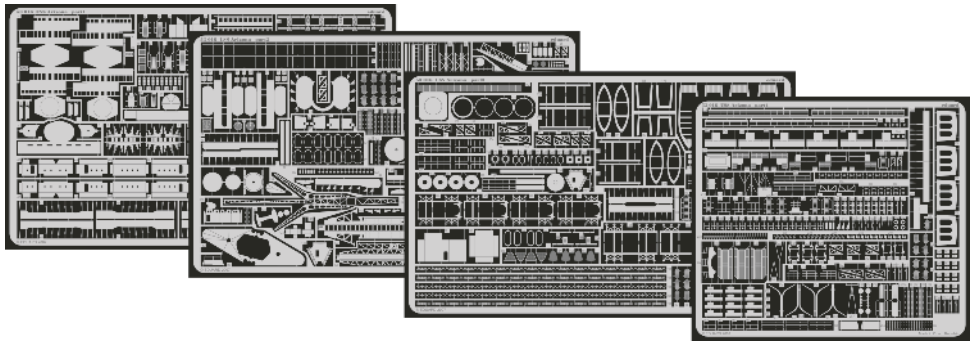

APPLY EXPRESS MASK AND PAINT BEFORE GLUING
POUŽÍT EXPRESS MASK NABARVIT PŘED SLEPENÍM
SYMETRICAL ASSEMBLY
SYMETRICKÁ MONTÁŽ
REMOVE
ODSTRANIT
BEND
OHNOUT
GRIND
OBROUSIT
OPTION
VOLBA
DRILL HOLE
VRTAT OTVOR
REPLACE
NAHRADIT

ORIGINAL KIT PARTS
PŮVODNÍ DÍLY STAVEBNICE
PHOTO-ETCHED PARTS
LEPTANÉ DÍLY
PARTS TO BE REMOVED
DÍLY K ODSTRANĚNÍ
FILL
TMELIT

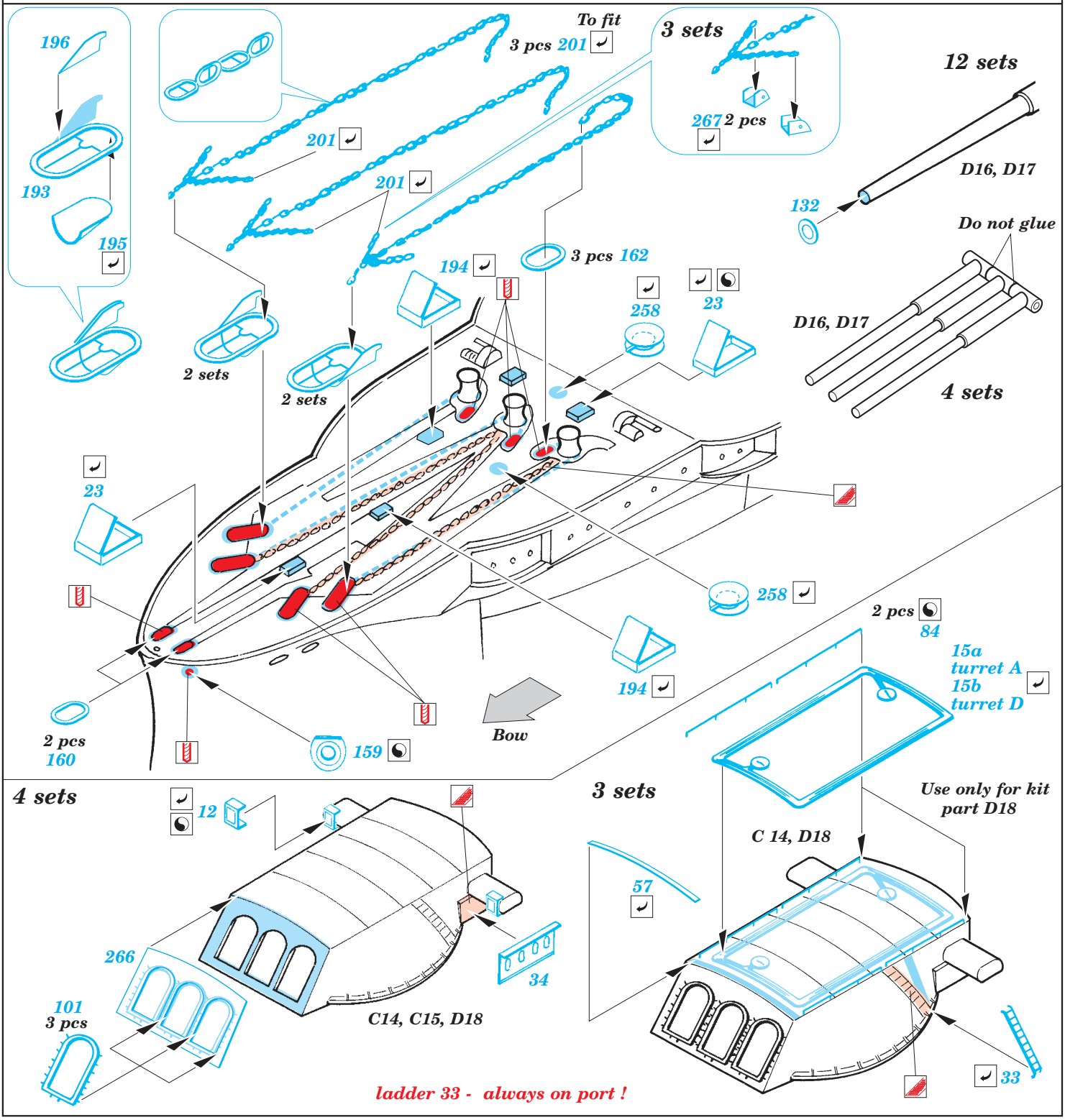

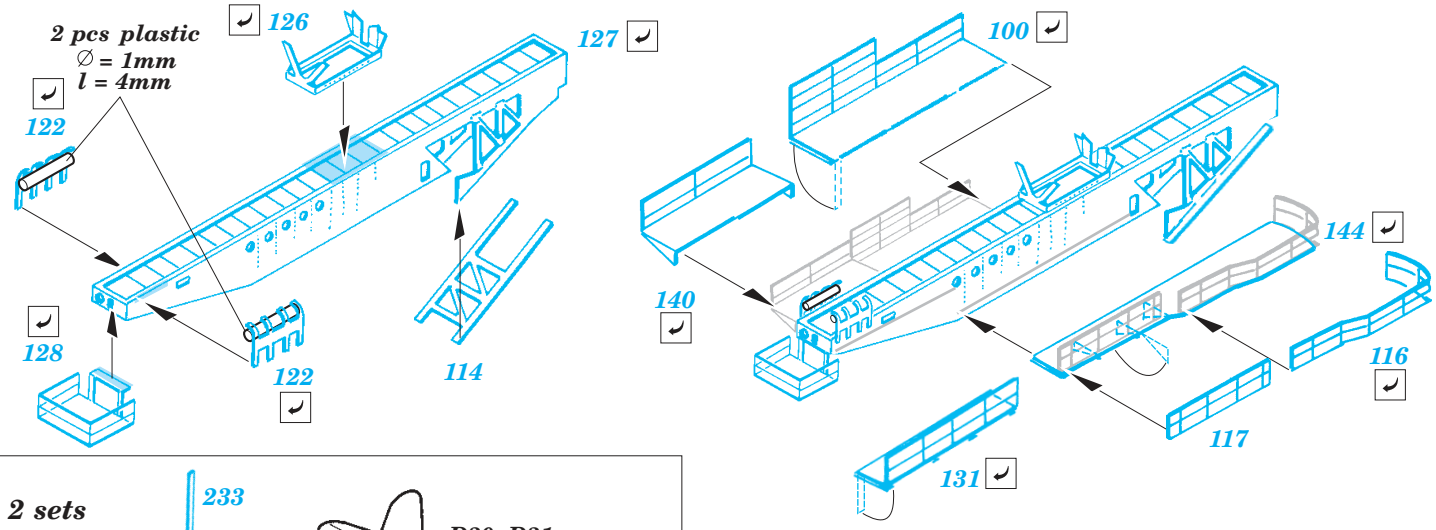
2 pcs plastic
∅ = 1mm
l = 4mm
122
126
127
128
122
114
100
140
144
116
117
131

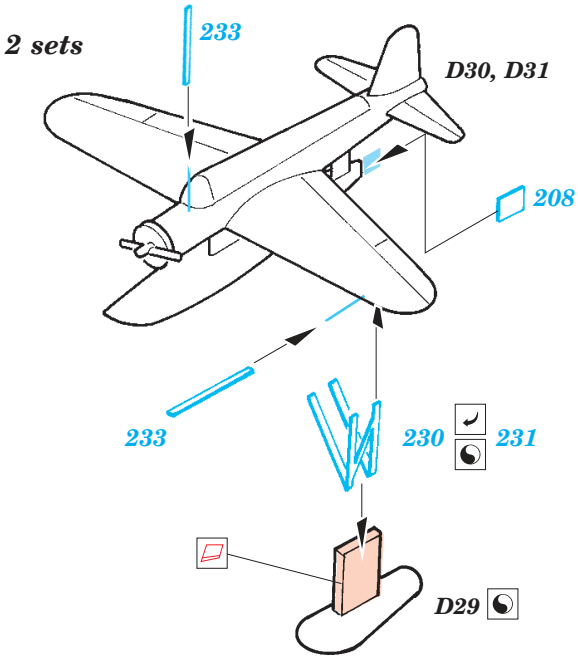
2 sets
233
D30, D31
208
233
230
231
D29

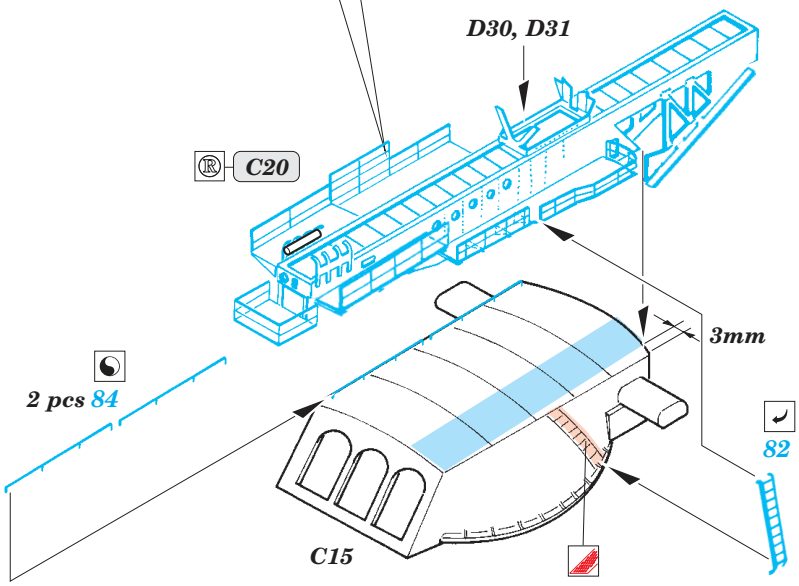
D30, D31
C20
3mm
2 pcs 84
82
C15

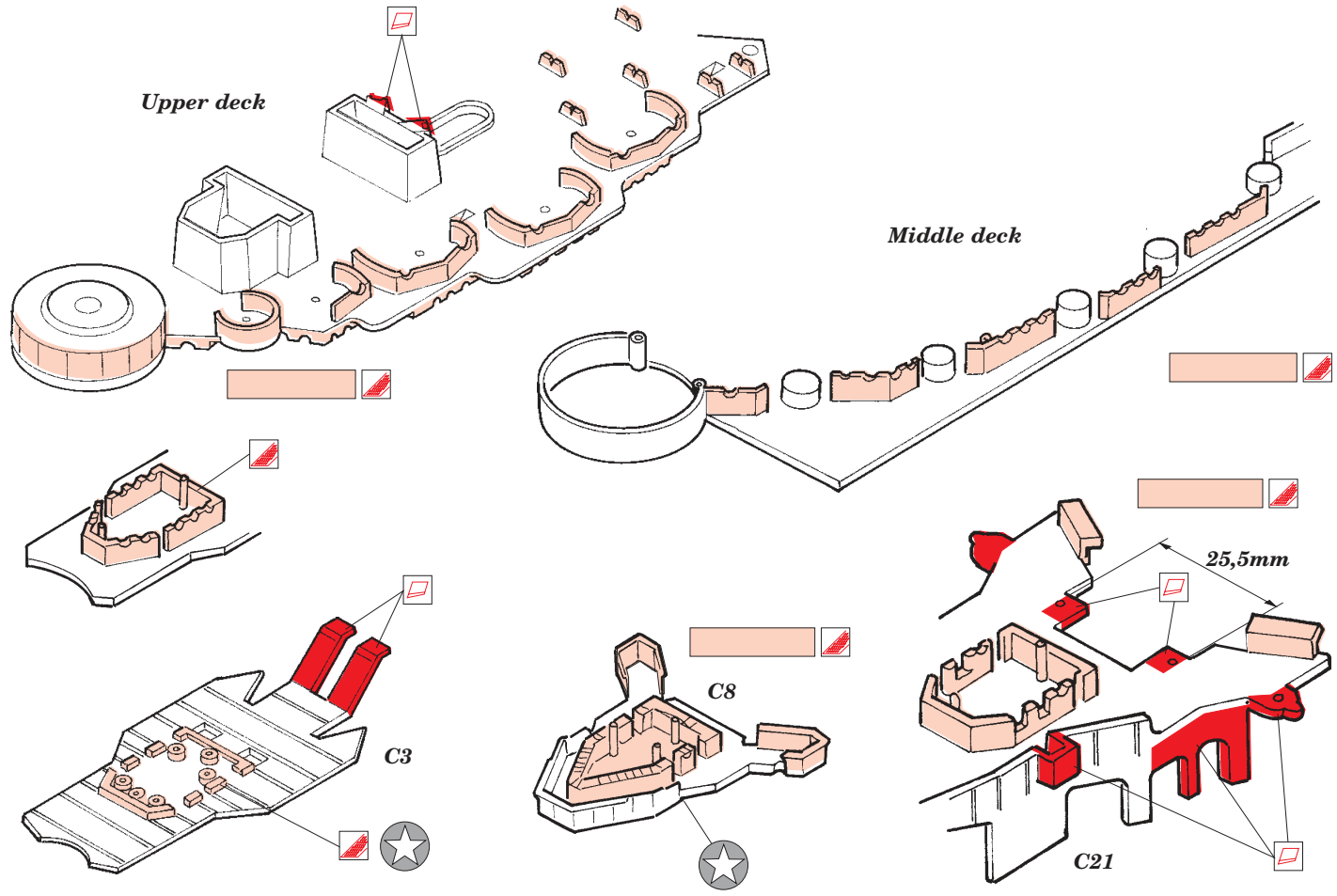
Upper deck
Middle deck
C3
C8
25,5mm
C21

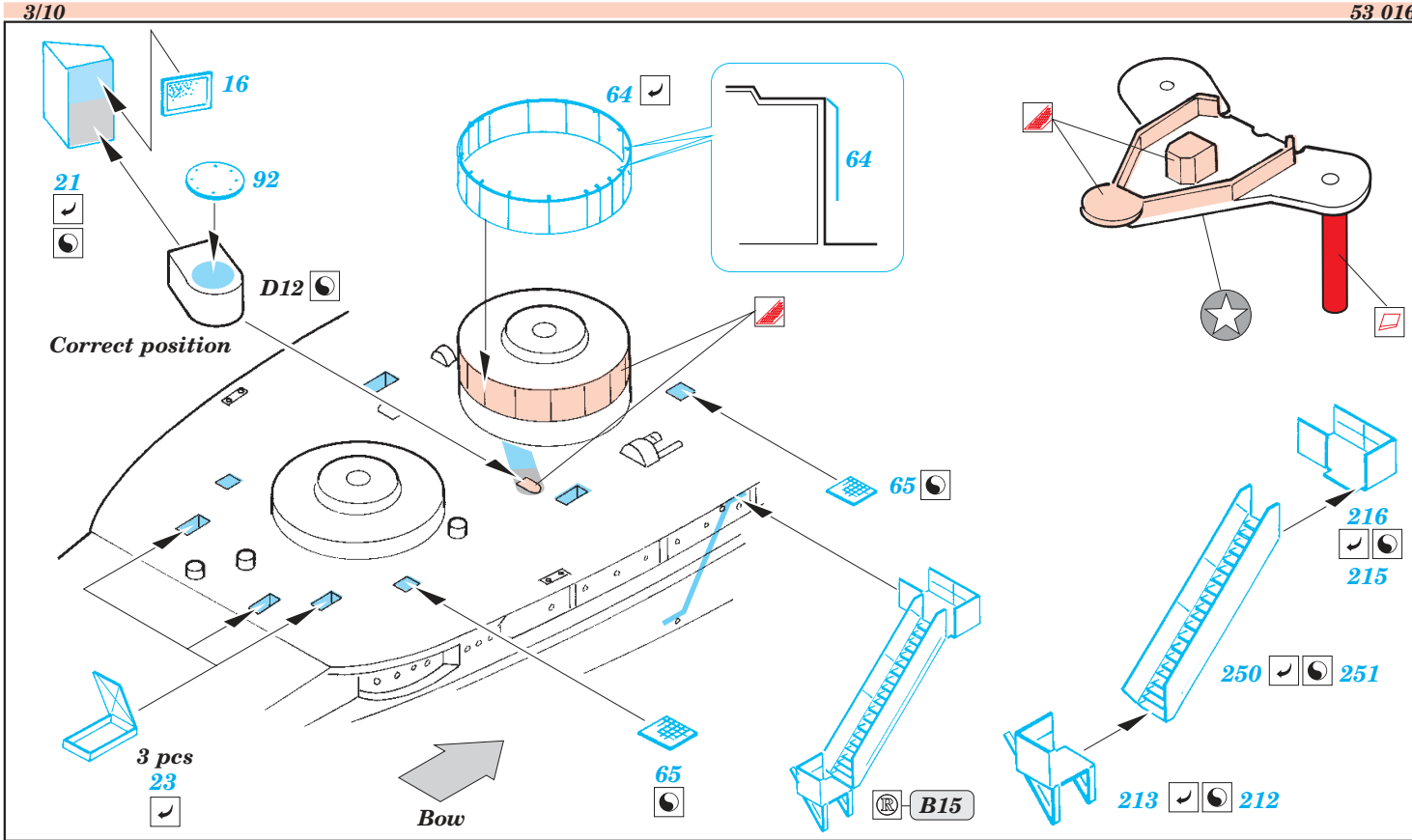
16
21
92
D12
Correct position
64
64
65
65
3 pcs
23
Bow
B15
216
215
250
251
213
212

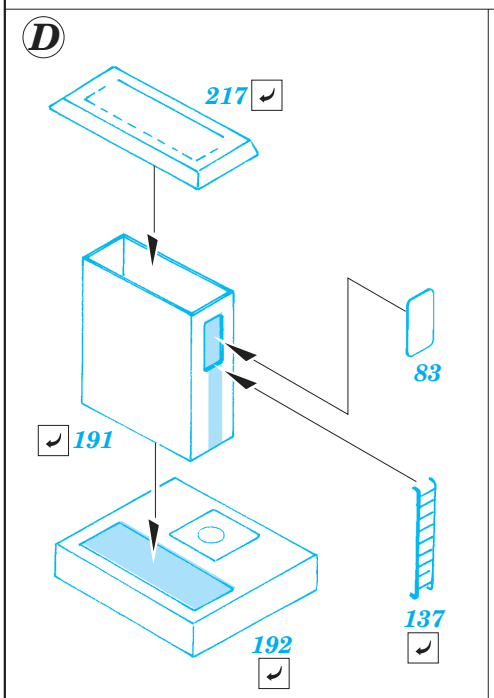
D
217
83
191
137
192

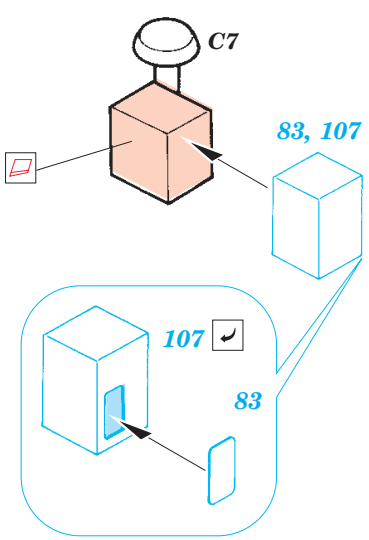
C7
83, 107
107
83

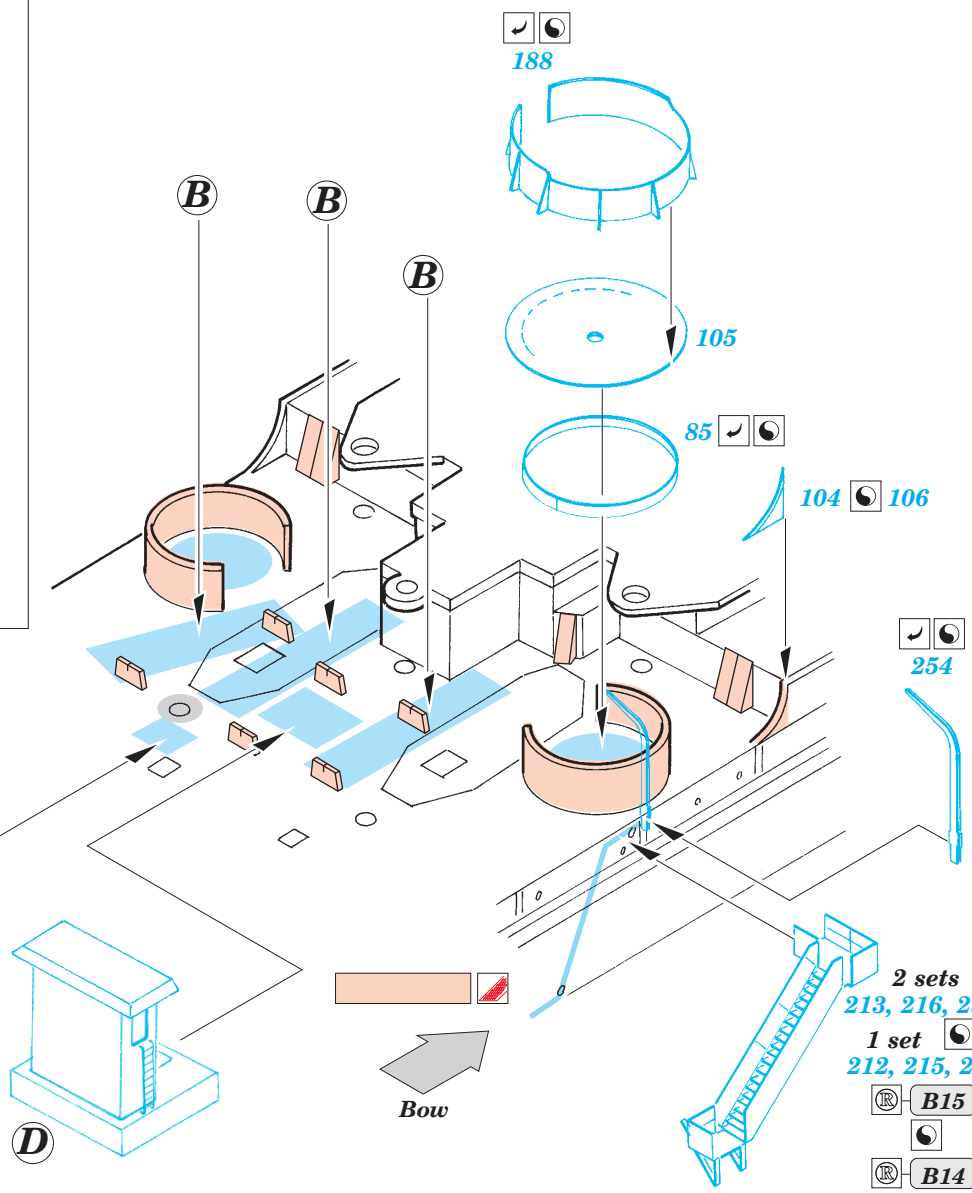
188
B
B
B
105
85
104
106
254
D
Bow
2 sets
213, 216, 251
1 set
212, 215, 250
B15
B14

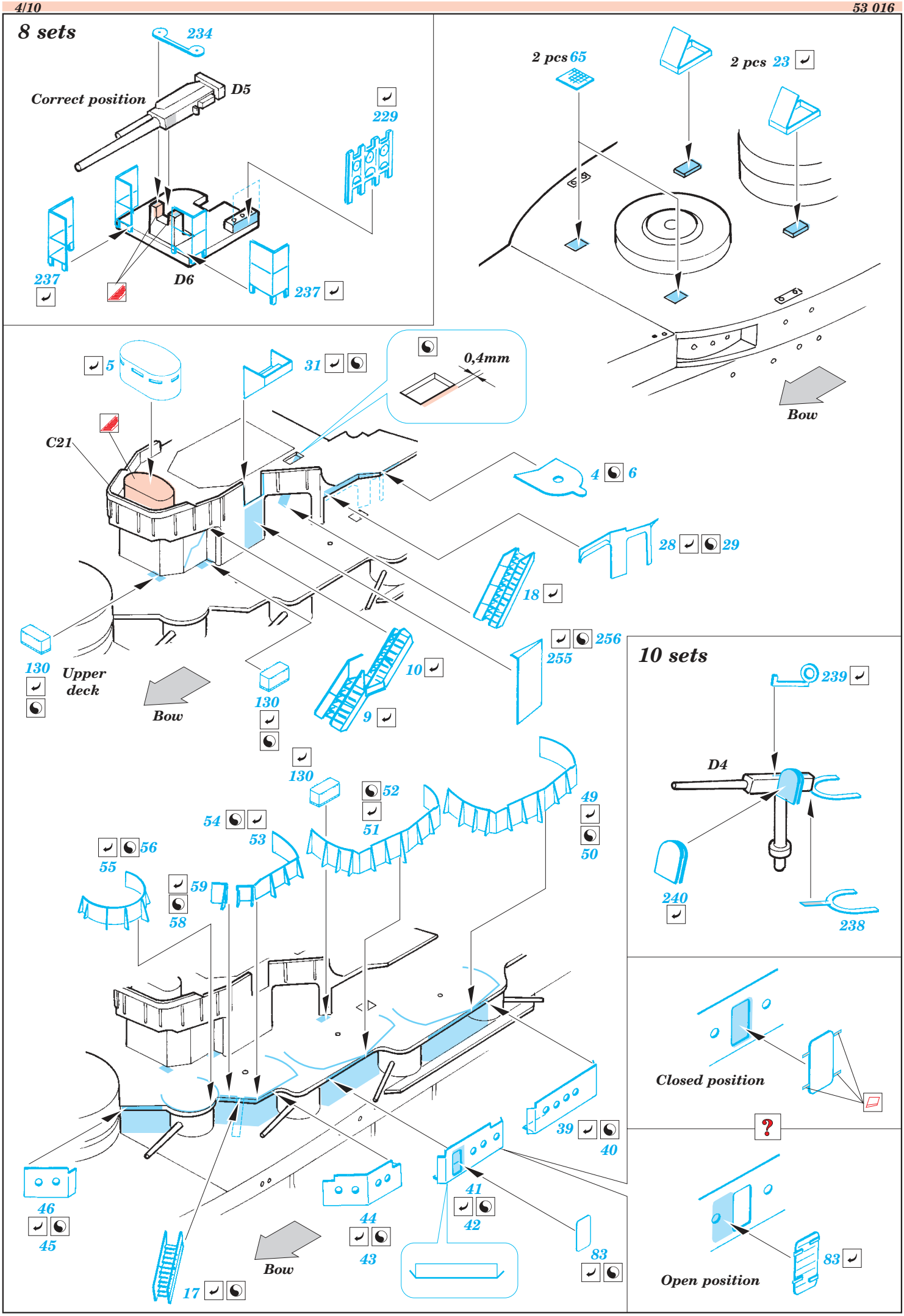
8 sets
234
Correct position
D5
229
237
D6
237
2 pcs 65
2 pcs 23
Bow
5
31
0,4mm
C21
4 6
28 29
18
130
Upper deck
Bow
130
10
9
255 256
130
52
51
49
50
54 53
55 56
59
58
10 sets
239
D4
240
238
Closed position
?
Open position
83
39 40
41
42
44
43
46
45
17
Bow
83

Page 6

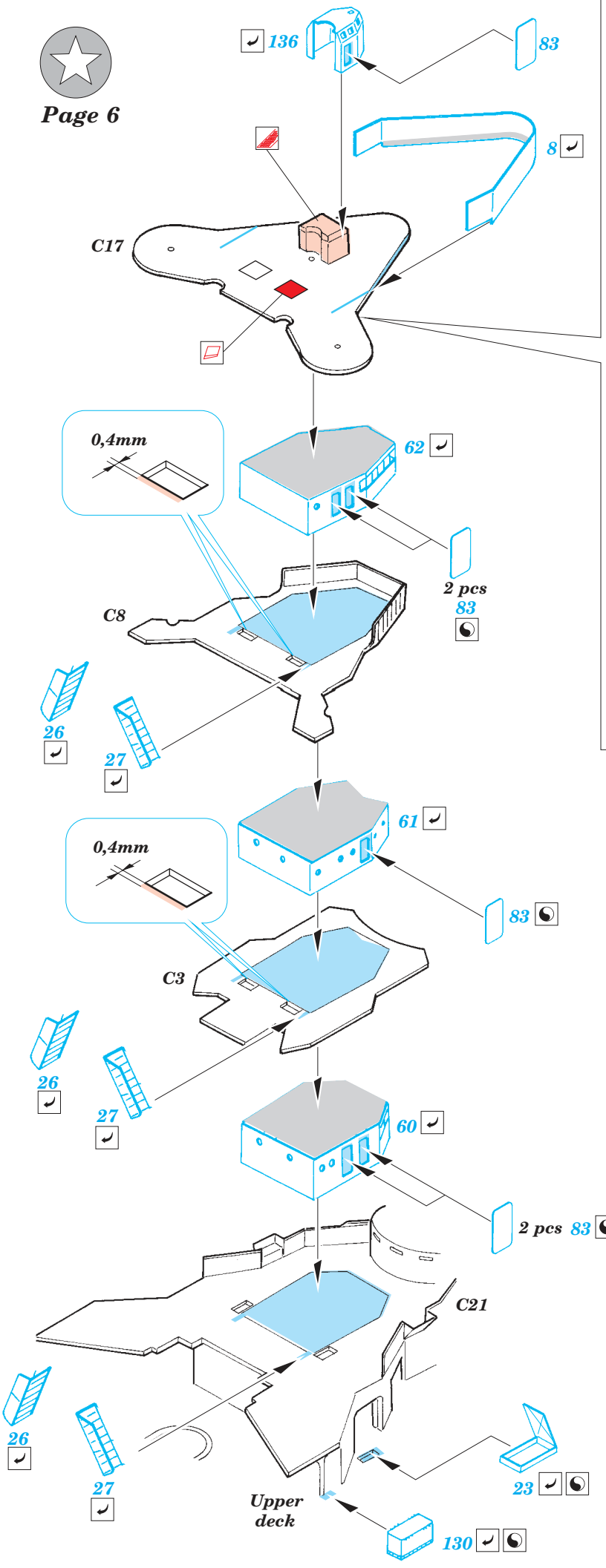
136
83
8
C17
0,4mm
62
2 pcs
83
C8
26
27
61
0,4mm
83
C3
26
27
60
2 pcs 83
C21
26
27
Upper deck
23
130

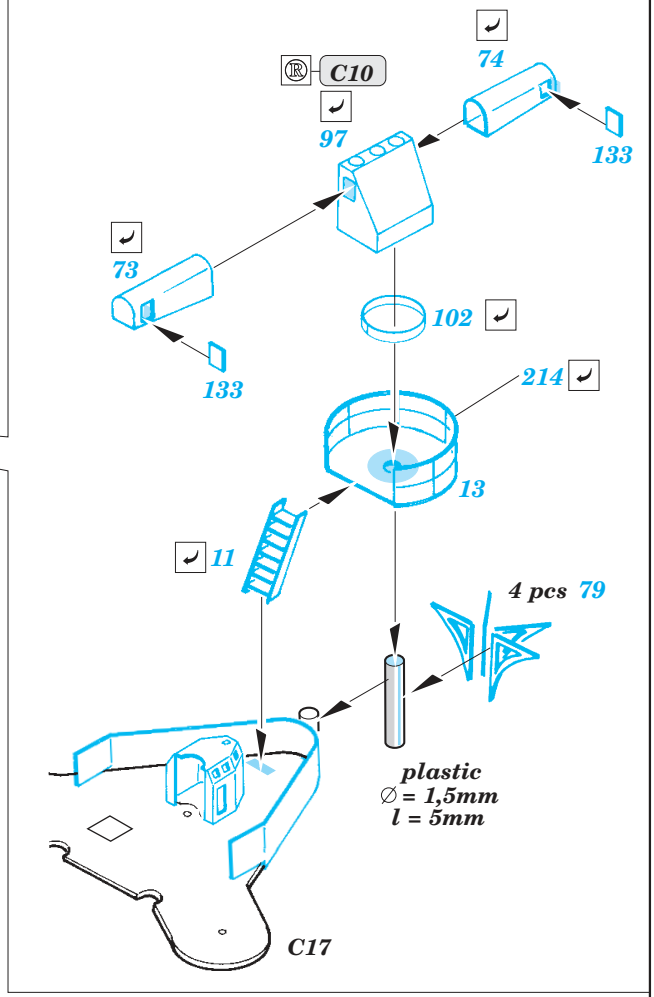
C10
74
97
133
73
133
102
214
13
11
4 pcs 79
plastic
∅ = 1,5mm
l = 5mm
C17

2 sets

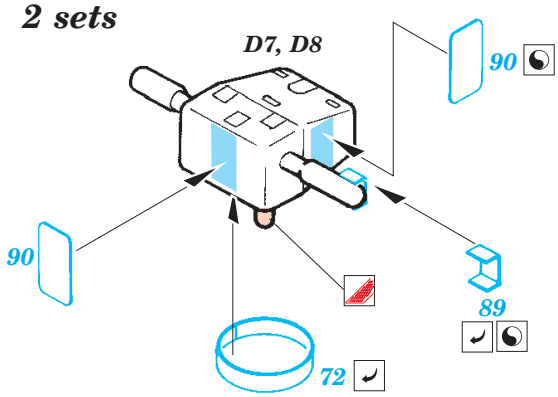
D7, D8
90
90
89
72

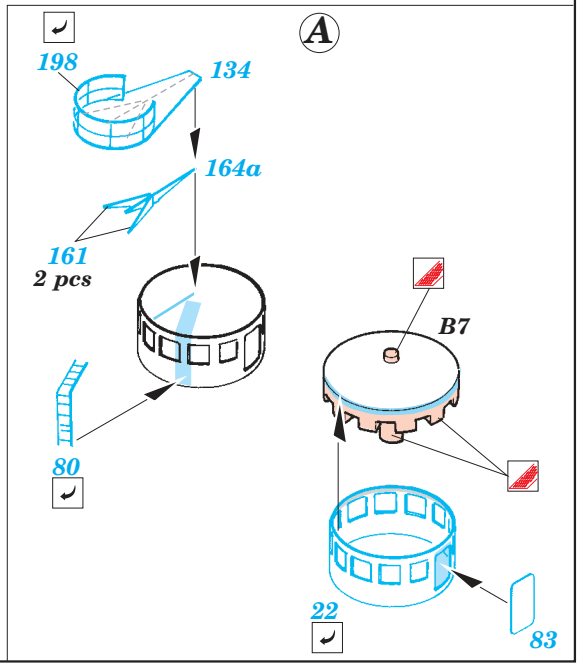
A
198
134
164a
161
2 pcs
80
B7
22
83

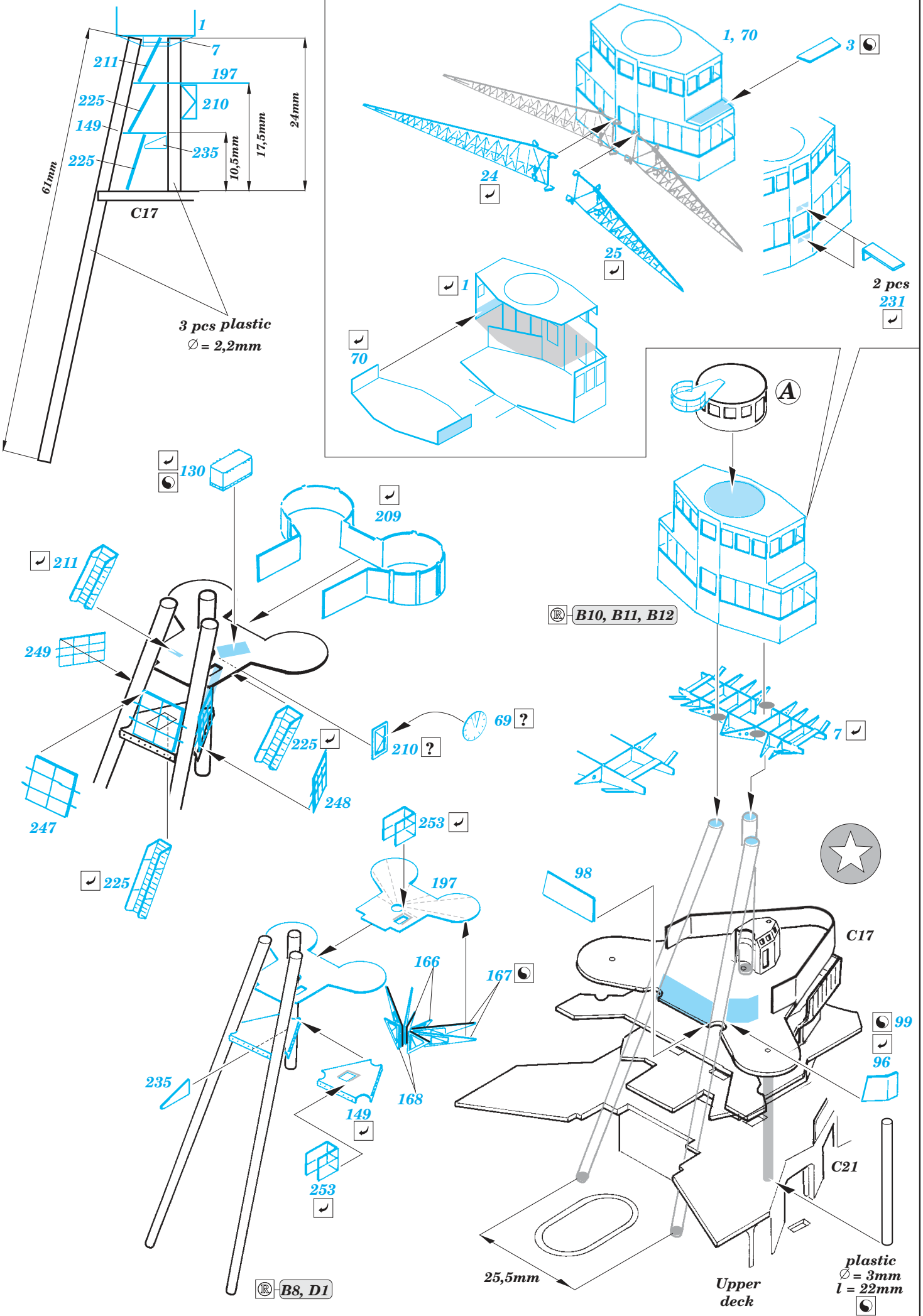
1
7
211
197
225
210
149
235
225
61mm
10,5mm
17,5mm
24mm
C17
3 pcs plastic
∅ = 2,2mm
1, 70
3
24
25
2 pcs
231
1
70
A
130
209
211
249
247
225
210 ?
69 ?
248
225
B10, B11, B12
7
253
197
166
167
168
235
149
253
B8, D1
98
C17
99
96
C21
25,5mm
Upper deck
plastic
∅ = 3mm
l = 22mm

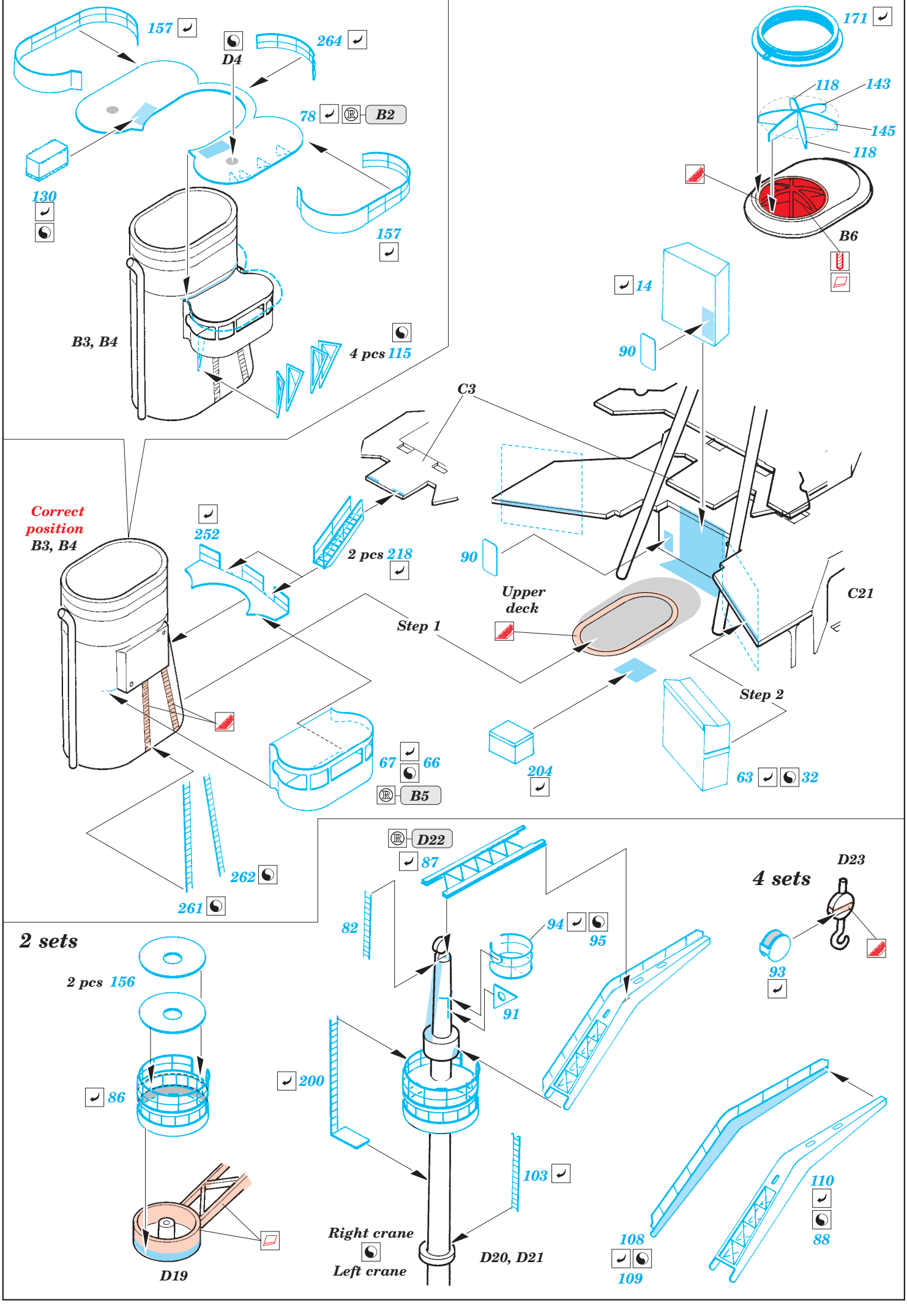
157
D4
264
78
B2
130
157
B3, B4
4 pcs 115
171
118
143
145
118
B6
14
90
C3
Correct position
B3, B4
252
2 pcs 218
90
Upper deck
C21
Step 1
Step 2
67
66
B5
204
63
32
262
261
D22
87
82
94
95
91
D23
4 sets
93
2 sets
2 pcs 156
86
200
103
Right crane
Left crane
D20, D21
D19
108
109
110
88

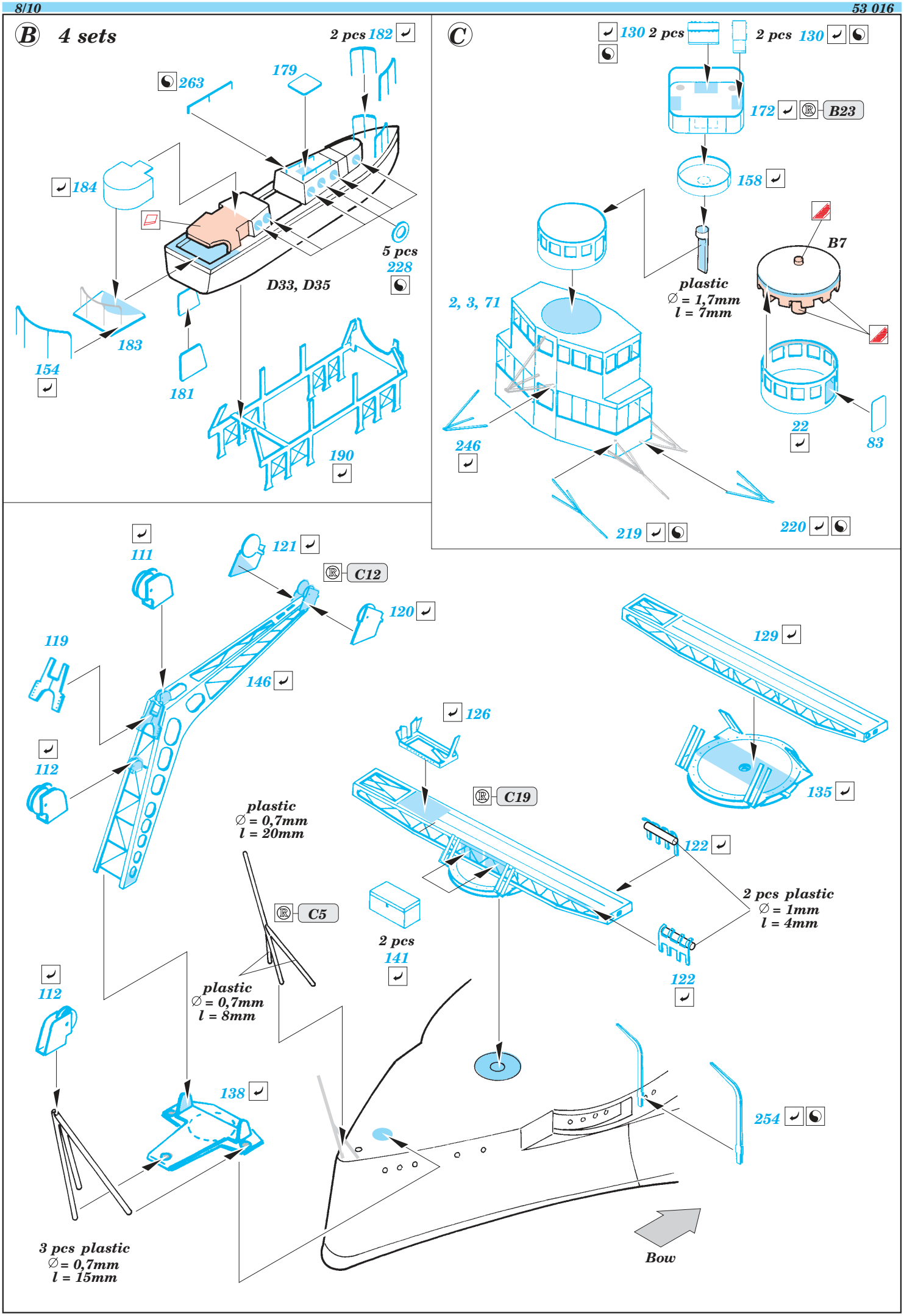
B 4 sets
2 pcs 182
263
179
184
5 pcs 228
D33, D35
183
154
181
190
C
130 2 pcs
2 pcs 130
172 B23
158
B7
plastic ∅ = 1,7mm l = 7mm
2, 3, 71
22
83
246
219
220
111
121 C12
120
119
146
112
129
126
C19
135
122
plastic ∅ = 0,7mm l = 20mm
C5
2 pcs plastic ∅ = 1mm l = 4mm
2 pcs 141
122
112
plastic ∅ = 0,7mm l = 8mm
138
254
3 pcs plastic ∅ = 0,7mm l = 15mm
Bow

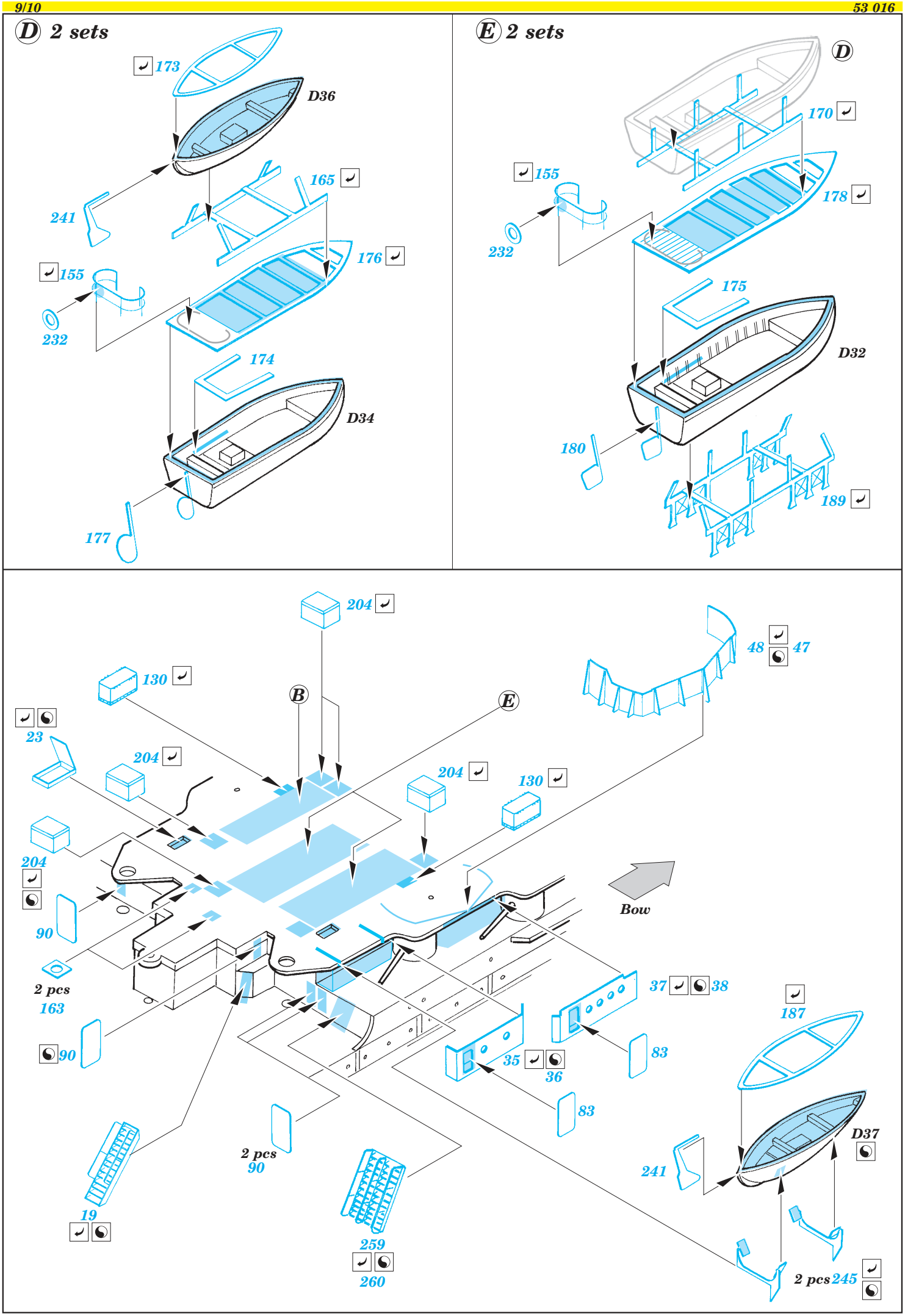
D 2 sets
173
D36
165
241
176
155
232
174
D34
177
E 2 sets
D
170
155
178
232
175
D32
180
189
204
130
B
E
48
47
23
204
204
130
204
90
2 pcs
163
Bow
37
38
187
90
35
36
83
83
2 pcs
90
D37
241
19
259
260
2 pcs
245

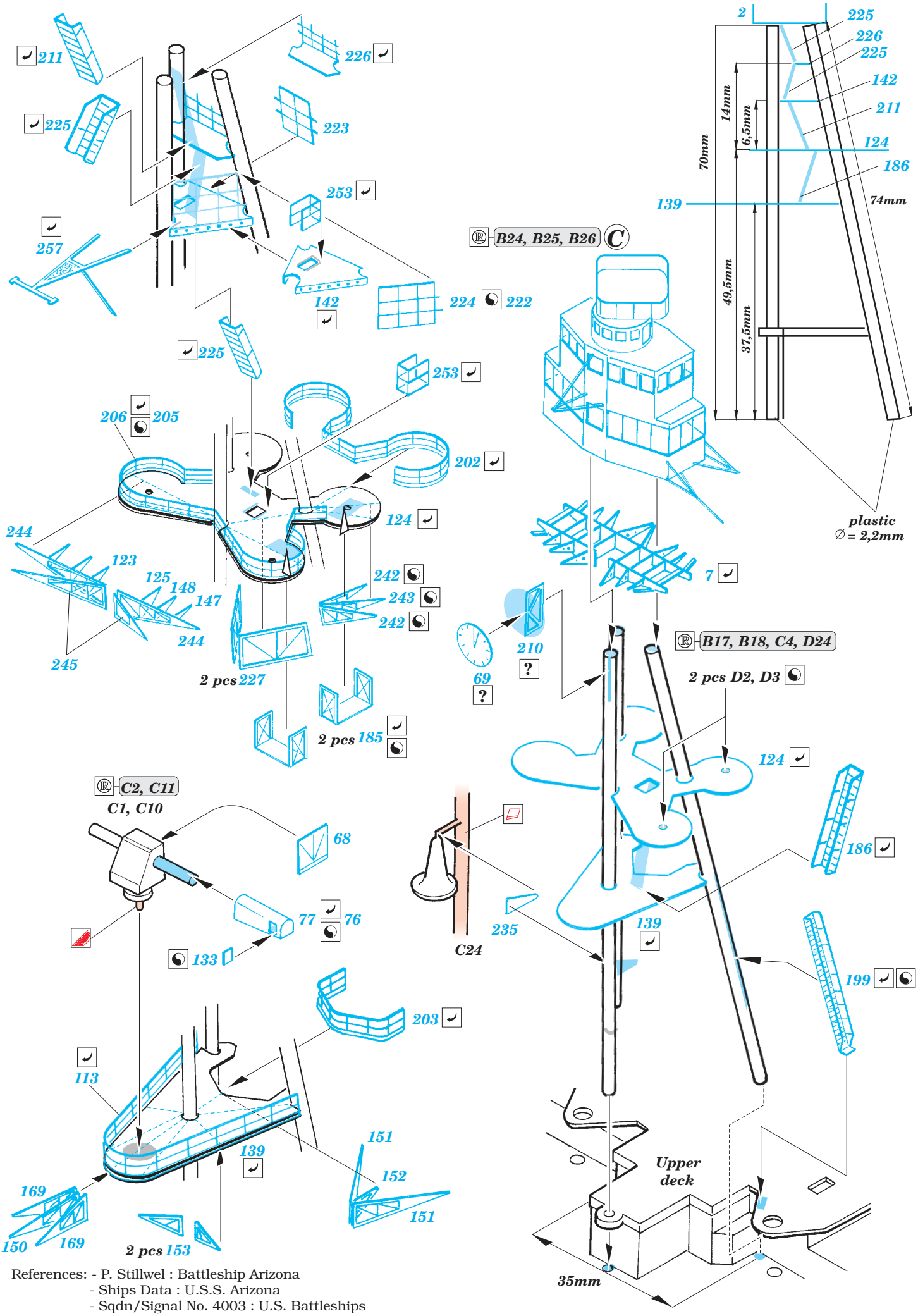

References: - P. Stillwel : Battleship Arizona
- Ships Data : U.S.S. Arizona
- Sqdn/Signal No. 4003 : U.S. Battleships

© EDUARD M.A. 2007