648 909 F-4E FOD covers

for Meng kit - pro stavebnici Meng

eduard BRASSIN Print

1/48 scale

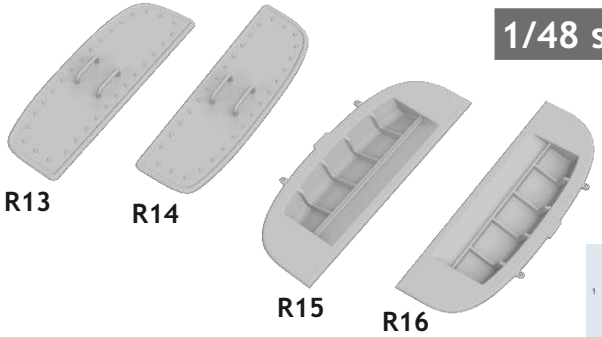



COLOURS

GSi Creos (GUNZE)			Mr.METAL COLOR	
AQUEOUS	Mr.COLOR			
H 3	C 3	RED		

eduard

435 21 Obrnice 170

Czech Republic

www.eduard.com

7,95

8 591437 582242

648 909 F-4E FOD covers

for Meng kit - pro stavebnici Meng

1/48

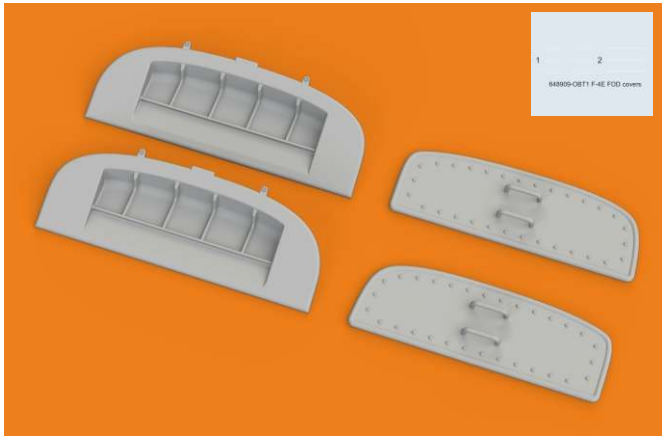

eduard

RIGHT SIDE: R13, R16
LEFT SIDE: R14, R15

PLASTIC PARTS (UPSIDE DOWN)

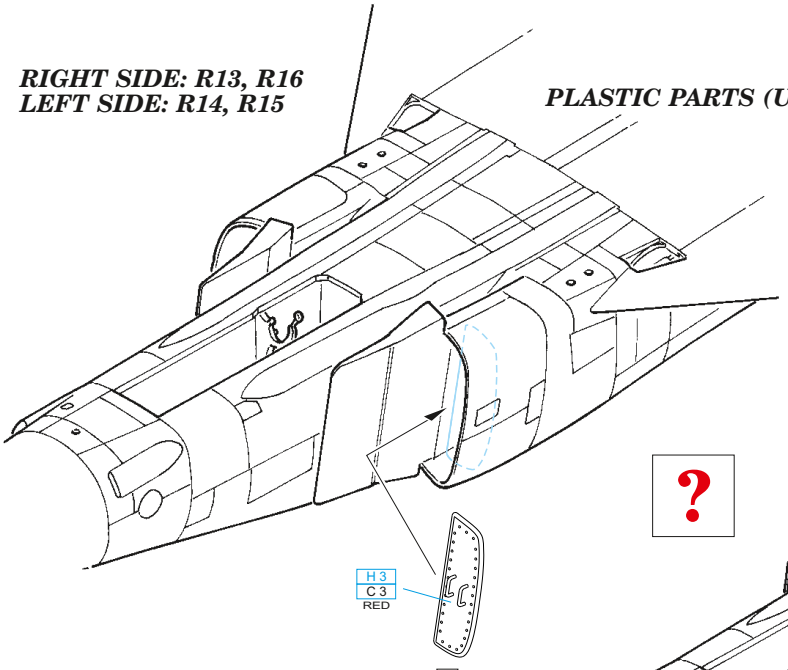

R13 ☯ R14

DECALS

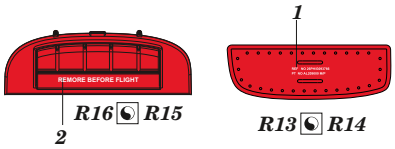

R16 ☯ R15 **R13 ☯ R14**

PLASTIC PARTS (UPSIDE DOWN)

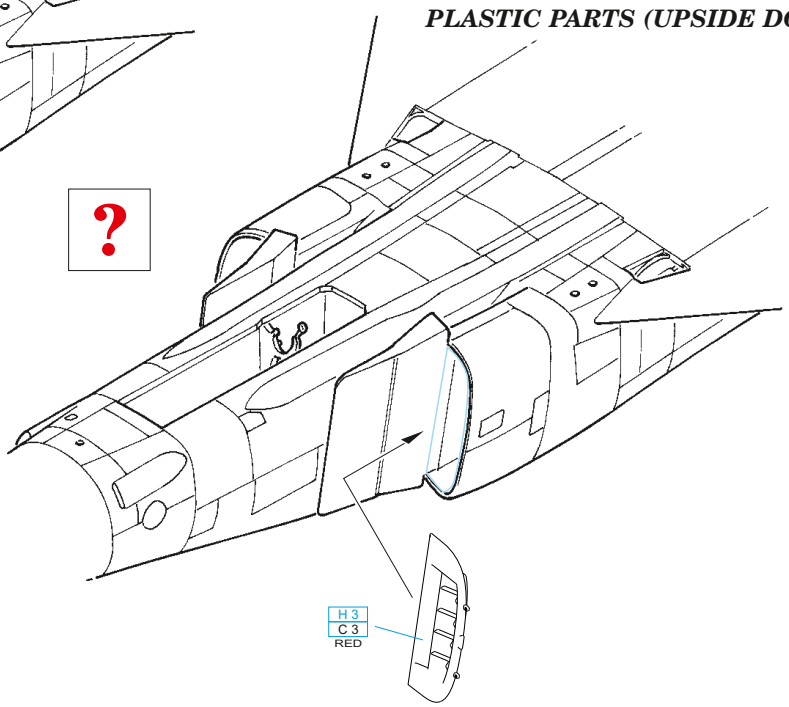

R16 ☯ R15

REMOVE ODSTRANIT
BEND OHNOUT
GRIND OBROUSIT
OPTION VOLBA
DRILL HOLE VRTAT OTVOR
REPLACE NAHRADIT
SYMETRICAL ASSEMBLY SYMETRICKÁ MONTÁŽ
SCRIBE THE PANEL AND HOLES RYTÍ
REVERSE SIDE OTOČIT

© EDUARD M.A. 2023