672 452 AN/AAQ-28

eduard BRASSIN Print

1/72 scale

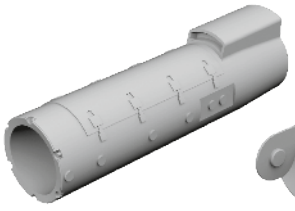

R26



R27



R28





COLOURS

GSi Creos (GUNZE)			Mr.METAL COLOR	
AQUEOUS	Mr.COLOR			
H 8	C 8	SILVER		
H79	C39	SANDY YELLOW		
H93	C50	CLEAR BLUE		
H305	C305	GRAY		

eduard

435 21 Obrnice 170
Czech Republic

www.eduard.com

8 591437 608294

672 452 AN/AAQ-28 1/72

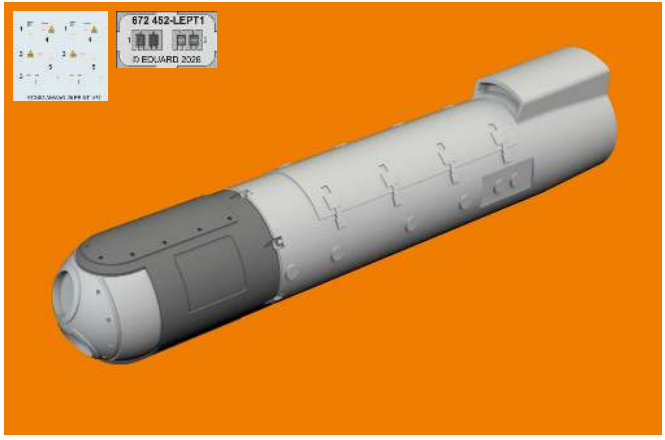

eduard

REMOVE
ODSTRANIT

BEND
OHNOUT

GRIND
OBROUSIT

OPTION
VOLBA

DRILL A HOLE
VRTAT OTVOR

REPLACE
NAHRADIT

SYMETRICAL ASSEMBLY
SYMETRICKÁ MONTÁŽ

SCRIBE THE PANEL AND HOLES
RYTÍ

REVERSE SIDE
OTOČIT

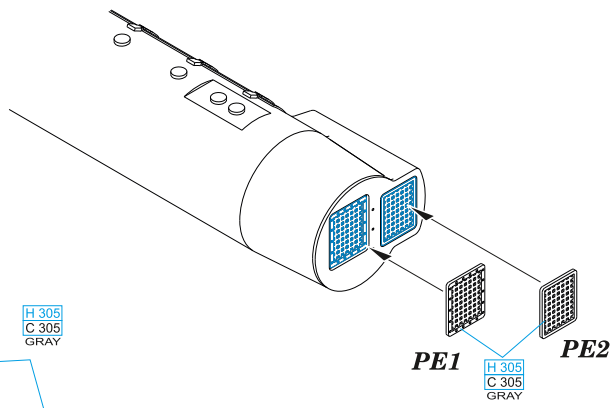

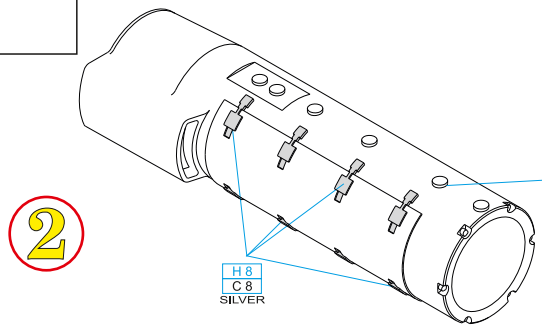

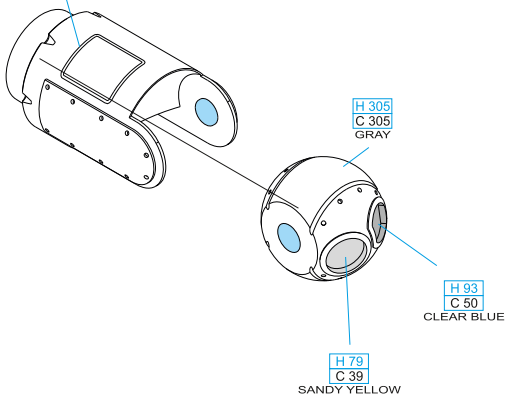

Decals application

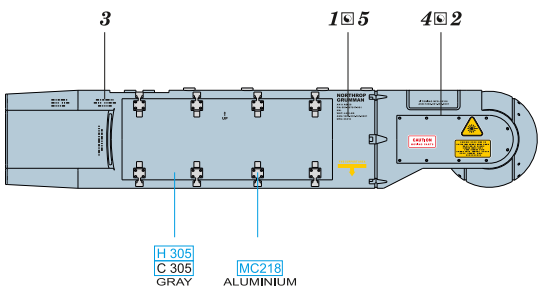

© EDUARD M.A. 2026