672 458 Bf 109K-4 undercarriage legs

for Eduard kit - pro stavebnici Eduard

eduard BRASSIN Print

1/72 scale



R28 R29 R30 R31 R32 R33

COLOURS

GSi Creos (GUNZE)		
AQUEOUS	Mr.COLOR	
H 70	C 60	RLM02 GRAY
H416	C416	RLM66 BLACK GRAY

Mr.COLOR SUPER METALLIC	
SM201	FINE SILVER

eduard

435 21 Obrnice 170
Czech Republic

www.eduard.com

8 591437 609000

672 458 Bf 109K-4 undercarriage legs 1/72

for Eduard kit - pro stavebnici Eduard



eduard

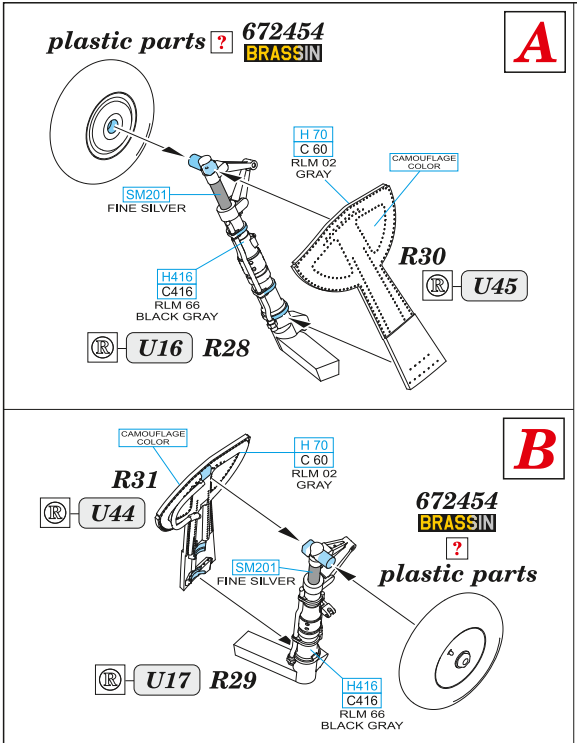

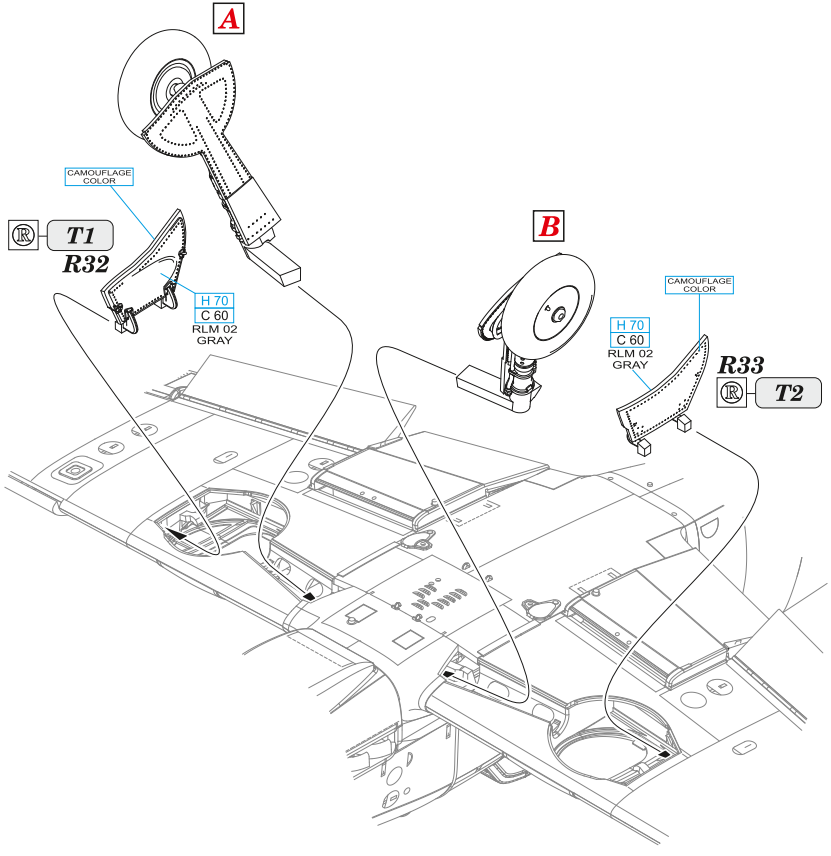

REMOVE ODSTRANIT
BEND OHNOUT
GRIND OBROUSIT
OPTION VOLBA
DRILL A HOLE VRTAT OTVOR
REPLACE NAHRADIT
SYMETRICAL ASSEMBLY SYMETRICKÁ MONTÁŽ
SCRIBE THE PANEL AND HOLES RYTÍ
REVERSE SIDE OTOČIT

© EDUARD M.A. 2026