SCALE
1/48

F-4B STENCILS

ITEM #
D48094

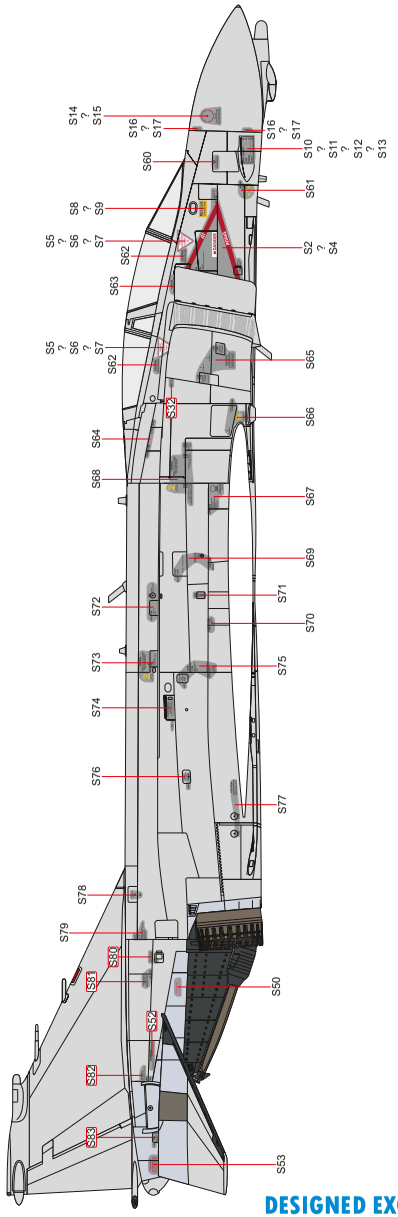

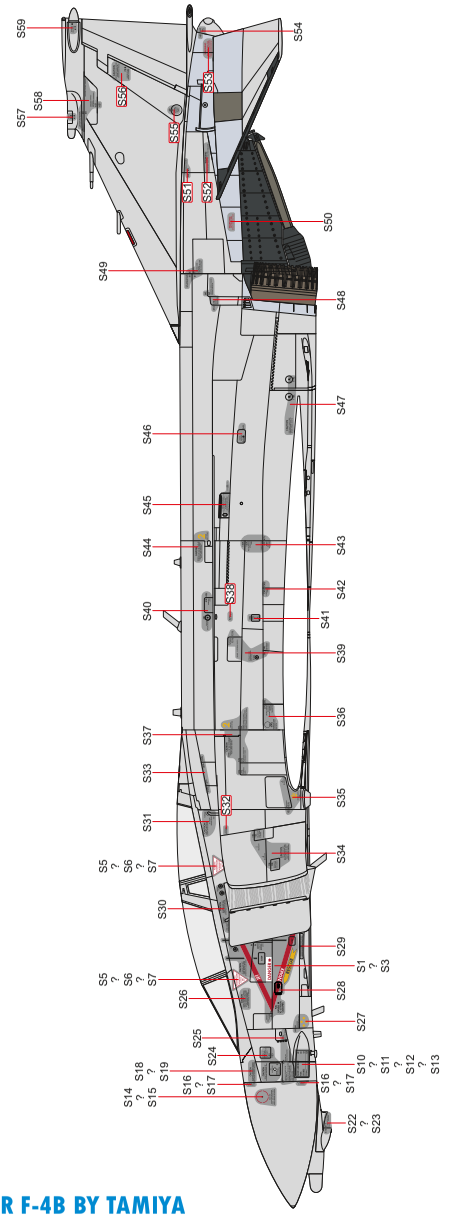

DESIGNED EXCLUSIVELY FOR F-4B BY TAMIYA

Eduard - Model Accessories, 435 21 Obrnice 170,
Czech Republic

WWW.EDUARD.COM

D48094 F-4B stencils 1/48

8 591437 562831



Nose gear door
inner side

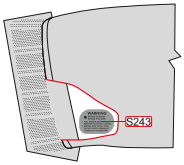

Left air intake
inner side

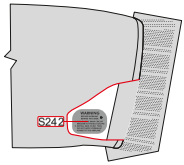

Right air intake
inner side

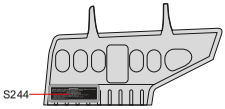

Left airbrake

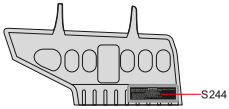

Right airbrake

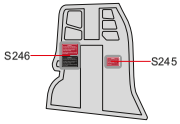

Left main gear
door

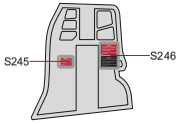

Right main gear
door

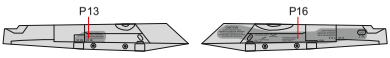

Left outer pylon



Right outer pylon

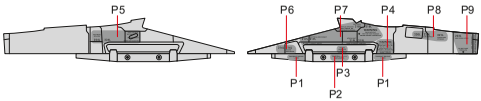

Left LAU/7A

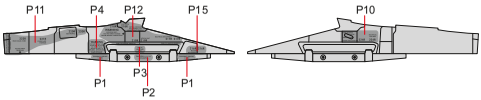

Right LAU/7A

eduard

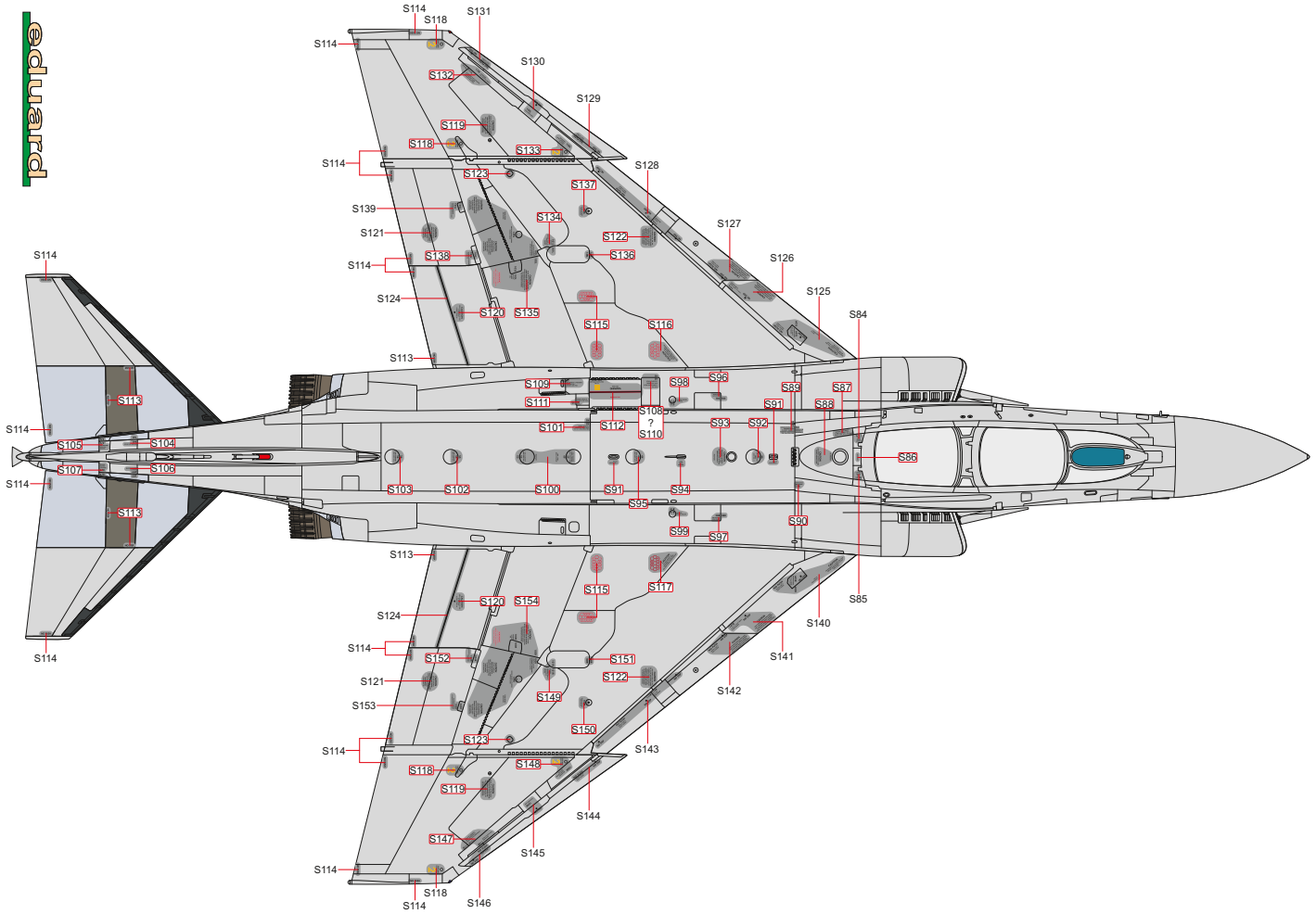
S114
S118
S131
S114
S130
S132
S129
S119
S118
S133
S114
S128
S123
S137
S139
S134
S127
S121
S122
S126
S114
S138
S136
S125
S124
S120
S135
S84
S115
S116
S113
S109
S98
S96
S89
S87
S113
S111
S91
S88
S114
S108
?
S110
S101
S112
S93
S92
S86
S105
S104
S107
S106
S114
S103
S102
S100
S91
S95
S94
S90
S113
S99
S97
S115
S117
S124
S120
S154
S85
S140
S114
S152
S151
S141
S121
S122
S142
S153
S149
S150
S143
S123
S114
S118
S148
S119
S144
S147
S145
S114
S118
S114
S146

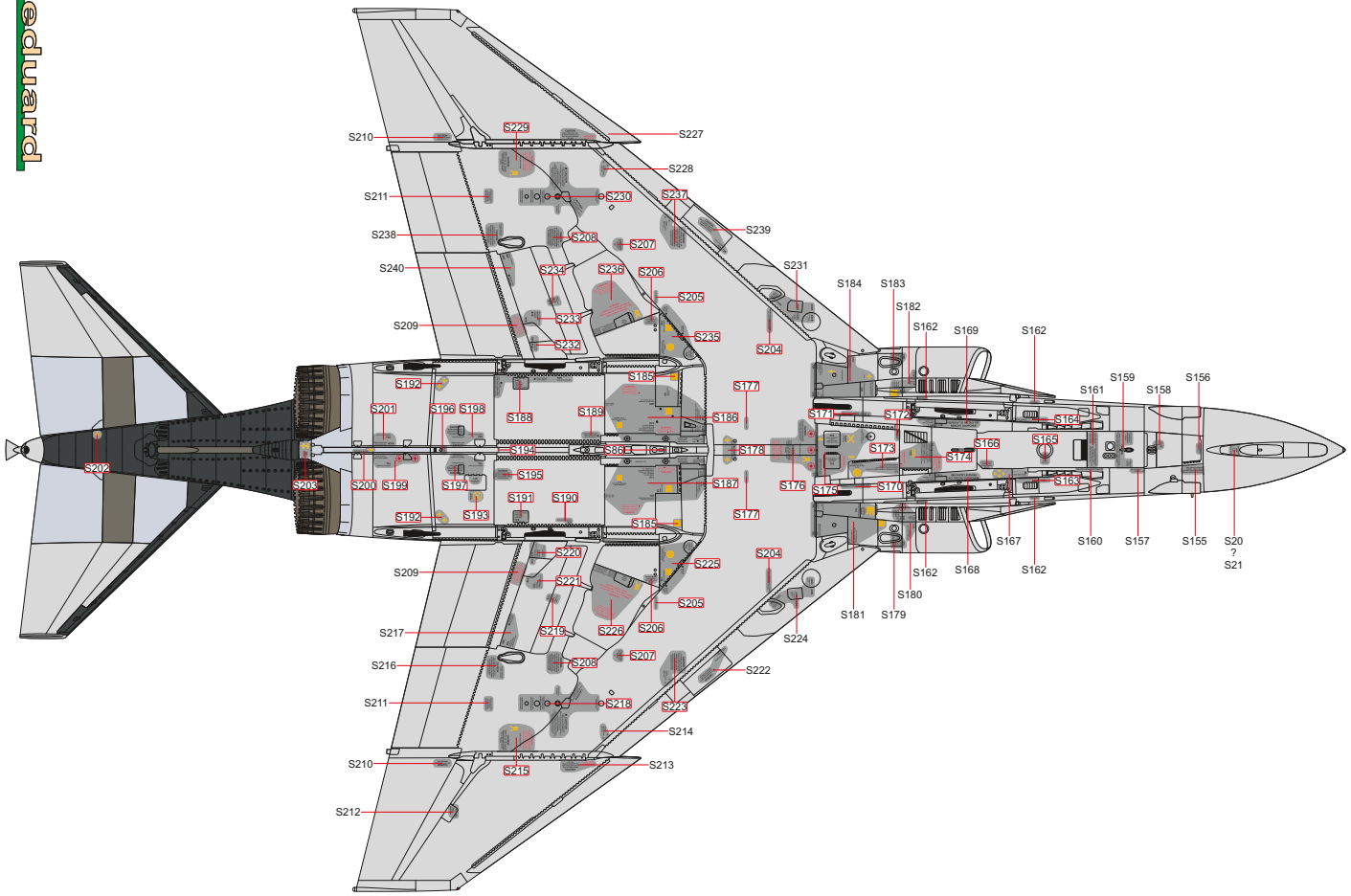
S210
S229
S227
S228
S211
S230
S237
S239
S238
S208
S207
S240
S234
S236
S206
S205
S231
S209
S233
S235
S204
S232
S184
S183
S182
S162
S169
S162
S192
S185
S177
S161
S159
S156
S201
S196
S198
S188
S189
S186
S171
S172
S158
S164
S202
S194
S186
S178
S173
S166
S165
S203
S200
S199
S197
S195
S187
S176
S175
S174
S170
S163
S192
S193
S191
S190
S185
S177
S167
S160
S157
S155
S20
?
S21
S209
S220
S225
S204
S221
S205
S162
S168
S162
S180
S217
S219
S226
S206
S181
S179
S224
S216
S208
S207
S222
S211
S218
S223
S214
S210
S215
S213
S212