IAR 80 Early - Gathering Storm 1941

Cat. No. 72564
Scale 1/72

3d design: Radu Brînzan
Research: IBG Crew

IBG Models would like to thank Mr. Horia Stoica and Mr. Michał Skawiński for the great help in recreating colour schemes for this model kit.

I.A.R.80 and 81 series

The legendary I.A.R.80 and 81 was the only Romanian fighter of domestic design to take part in World War II, often facing superior opponents and still being capable to hold its own thanks to the skills and courage of its pilots. The turns of war made for a very interesting operational career, with the airplane having the opportunity to fight all the major air forces in the theatre: USAAF, Soviet VVS, German Luftwaffe and the aviation of Hungary.

In the service of Aeronautica Regală Română, the third largest air force on the Eastern Front, the aircraft proved to be a very capable and dangerous weapon and became the symbol of the aviation of the Kingdom of Romania, remaining in service well after the end of hostilities - until the mid-1950s. In more than three years of combat, pilots flying the I.A.R.80 and 81 scored 539 confirmed and 90 unconfirmed victories over aircraft in the air and destroyed another 168 enemy machines on the ground.

The success of this design was possible thanks to the previous experience of I.A.R. designers with cantilever, low-wing monoplanes and the transfer of the all-metal airplane construction technology after the purchase of the P.11F license from Poland (see IBG Models set No. 72521). I.A.R.80 sleek lines bear resemblance to the Hughes H-1 racer, which might have been one of the distant inspirations, nevertheless the airframe was designed from scratch by Romanian engineers, who used only the heavily-modified rear fuselage and smaller parts from PZL P.24E fighter, licence-produced at I.A.R.

The entire production run included 450 numbered airframes (with the last two being lost during USAAF bombardment of I.A.R. factory at Brașov). In addition to the pure fighter airplane (I.A.R.80), the series included a fighter-bomber with dive bombing capability (I.A.R.81). It is worth to note that both during the production and in service, the airplanes underwent continuous improvement, resulting in a number of versions that visibly differed in fuselage length, wingspan, armament and other details. More on the differences between them can be found in the eBook downloadable from our website: http://www.ibgmodels.com/resources-2/

Early I.A.R.80 series

Initial series-production airplanes (understood here as airframes No. 2 to 50), differed from later series in having 4 machine guns in the wings, ring-and-bead gunsight, unarmoured seat and headrest, flatter canopy and fuselage belly. From the modeller's point of view the important aspect is also that it served in the period of the often-changing markings regulations, resulting in some strikingly colourful schemes, as presented in the marking options for this kit.

1	**Element assembled in previous step** Element złożony we wcześniejszym etapie	A	**Paint colour** Kolor farby	?	**Version to choose** Wersja do wyboru
1	**Element after assembly in current step** Element po złożeniu w aktualnym etapie	1	**Decal** Kalkomania	1	**Sub-assembly in step** Kolejne kroki w etapie

Please read instructions before assembly. Follow the sequence of assembly presented in instructions. Glue and paint not included.
Przed montażem przeczytać instrukcję. Przestrzegać kolejności montażu podanego w instrukcji. Klej i farby nie wchodzą w skład zestawu.

IBG Models
ul. Benedykta Hertza 2
04-603 Warszawa
Poland

tel +48 22 8159150
fax +48 22 8159151
ibgsc@ibg.com.pl
www.ibg.com.pl
www.ibgmodels.com

Elements of the model kit
Elementy modelu

Frame B1 / Ramka B*1*

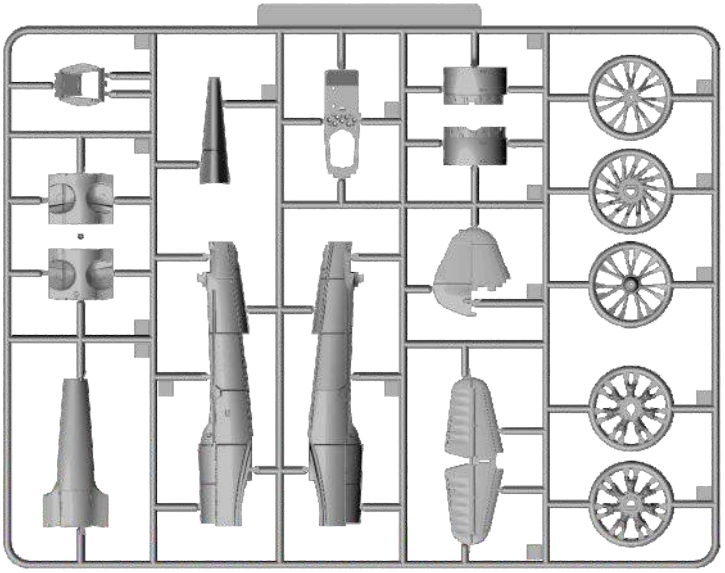

Frame B2 / Ramka B2

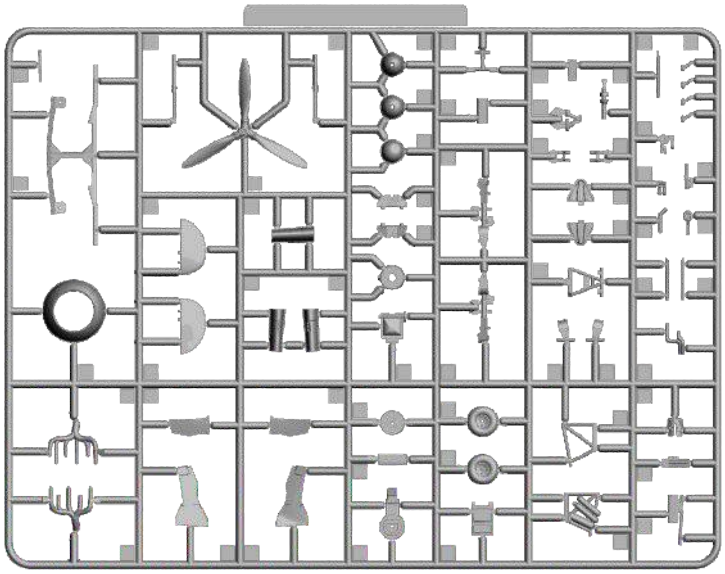

Frame F / Ramka F

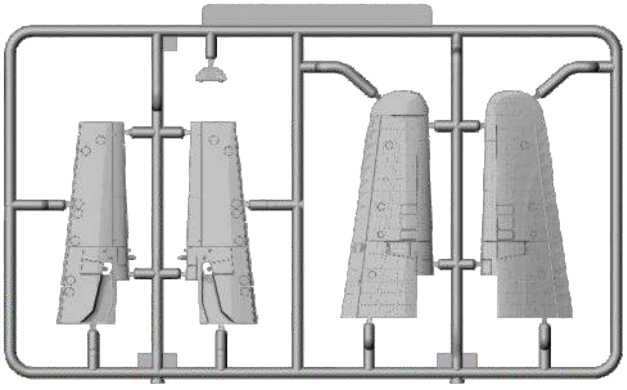

Frame E / Ramka E

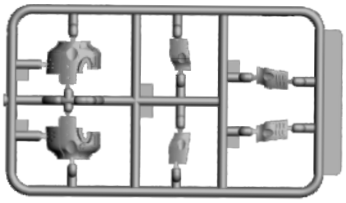

Frame A transparent / Ramka A przezroczysta

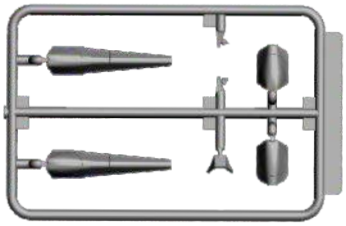

Photo-etched Parts
Elementy Fototarwione

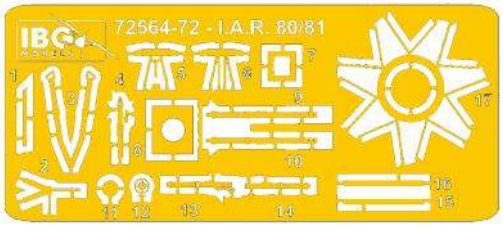

Decals / Kalkomanie

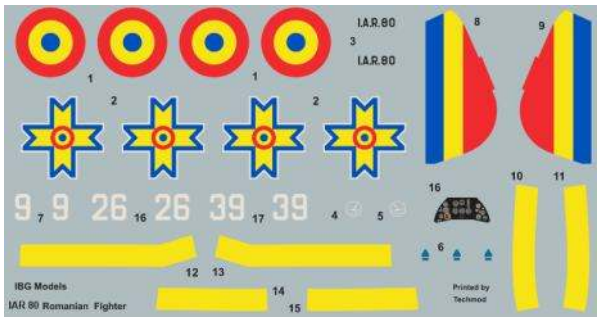

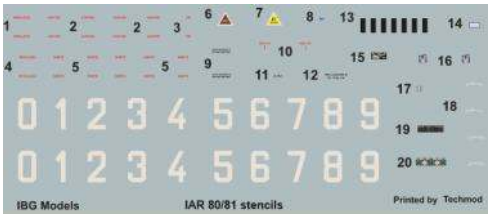

Interior painting
Malowanie wnętrza

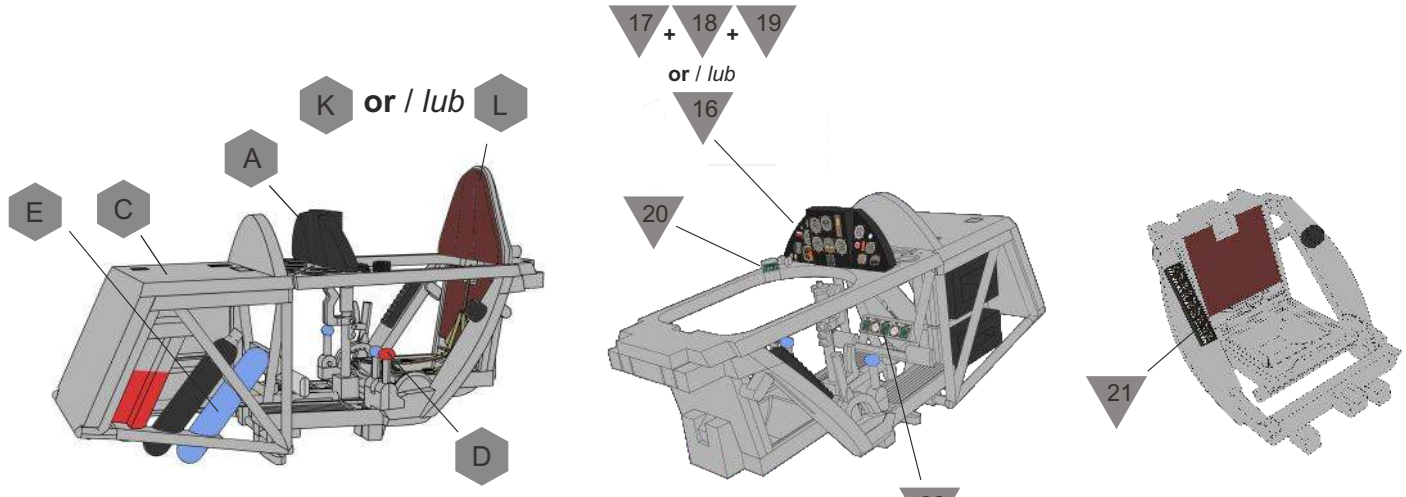

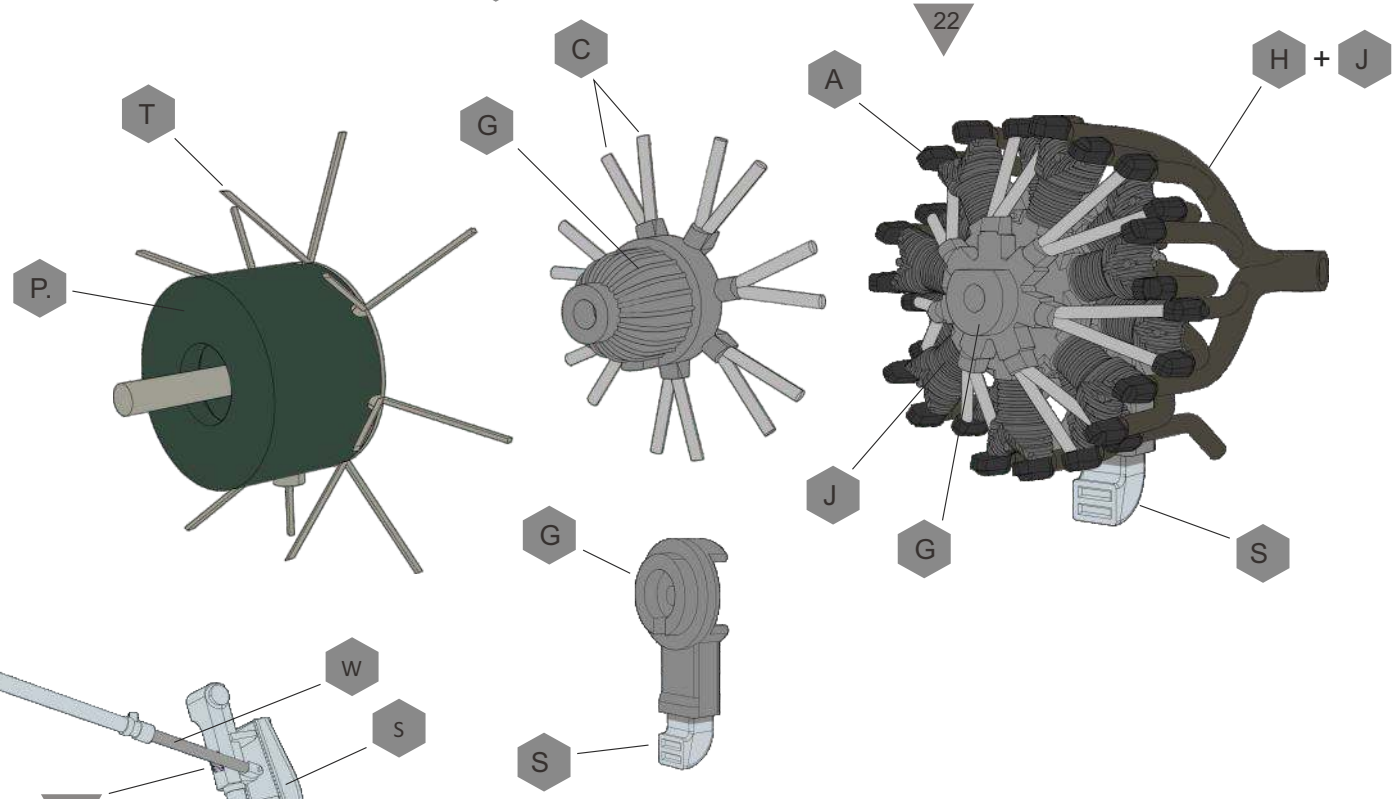

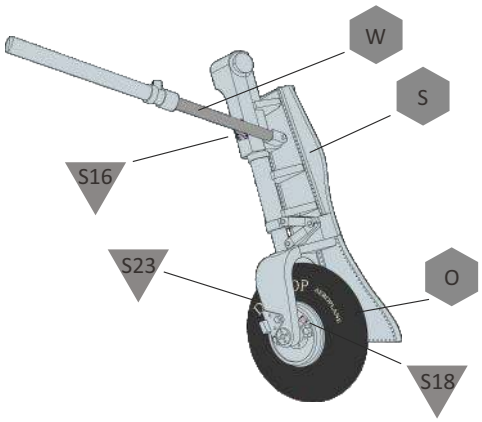

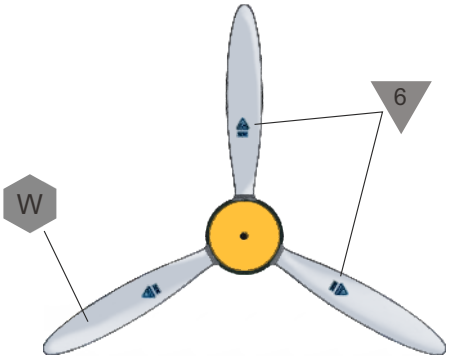

Reverse side of propeller blades in:
Tylna strona łopat śmigła w kolorze: X

		Hataka	Vallejo	Life Color	Mr Hobby	AKInteractive
Black	A	HTK-_100	71.057	LC02	H12	AK11029
White	B	HTK-_101	71.001	LC01	H21	AK11002
Silver	C	HTK-_003	71.063	LC24	H8	AK11209
Red	D	HTK-_103	71.003	UA808	H23	AK11213
Blue	E	HTK-_102	70.736	LC09	H93	AK11178
Green	F	HTK-_327	70.936	UA802	H94	AK11216
Engine Grey	G	HTK-_033	71.051	UA046	H53	AK11862
Rust	H	HTK-_132	71.130	LC32	H47	AK11103
Gunmetal	J	HTK-_106	71.072	LC26	H18	AK11212
Brown Leather	K	HTK-_186	72.740	UA764	H460	AK11110
Black Leather	L	HTK-_100	71.057	UA763	H12	AK11026
Seatbelt Grey-Brown	M	HTK-_074	71.075	UA202	H321	AK11009
Tyre black	O	HTK-_125	71.315	UA733	C135	AK11027
Romanian Green	P	HTK-_022	71.011	UA111	C309	AK11155
Romanian Khaki brown	R	HTK-_299	71.297	UA210	C517	AK11373
Romanian Blue-Grey	S	HTK-_203	71.407	UA036	C334	AK11848
Grey Primer	T	HTK-_048	71.121	UA025	C325	AK11866
Recognition Yellow	U	HTK-_066	71.078	UA140	C113	RC934
Aluminium	W	HTK-_078	71.062	UA792	SM208	AK481
RLM 70 Black Green	X	HTK-_015	71.021	UA501	H065	AK11821

Step 1
Etap 1

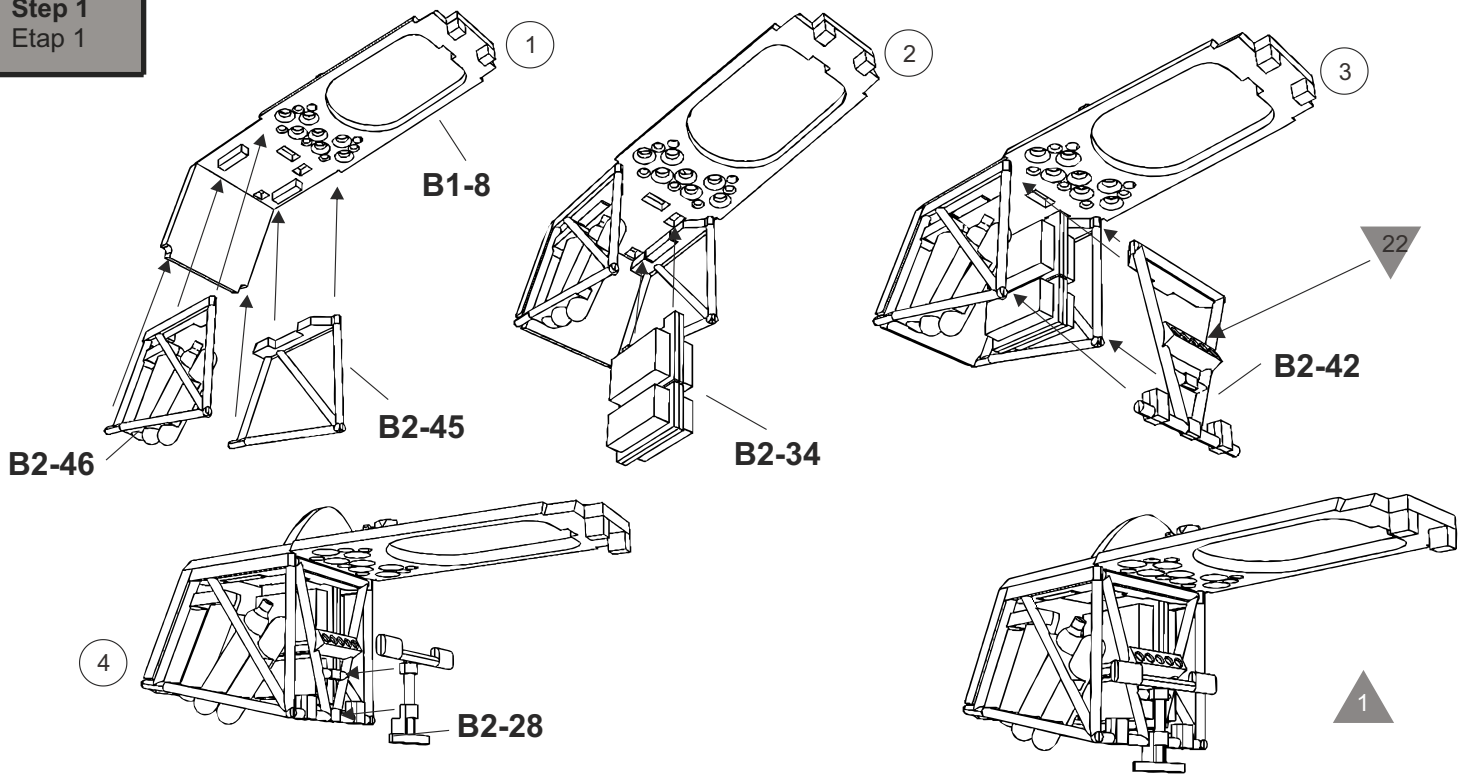

Step 2
Etap 2

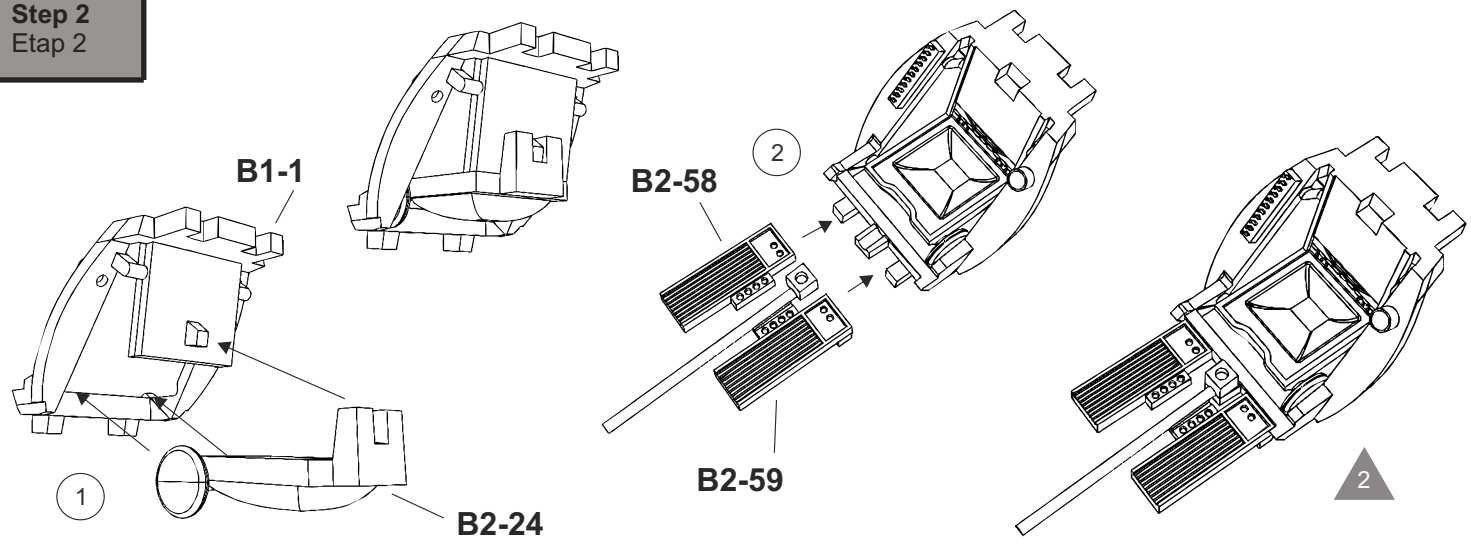

Step 3
Etap 3

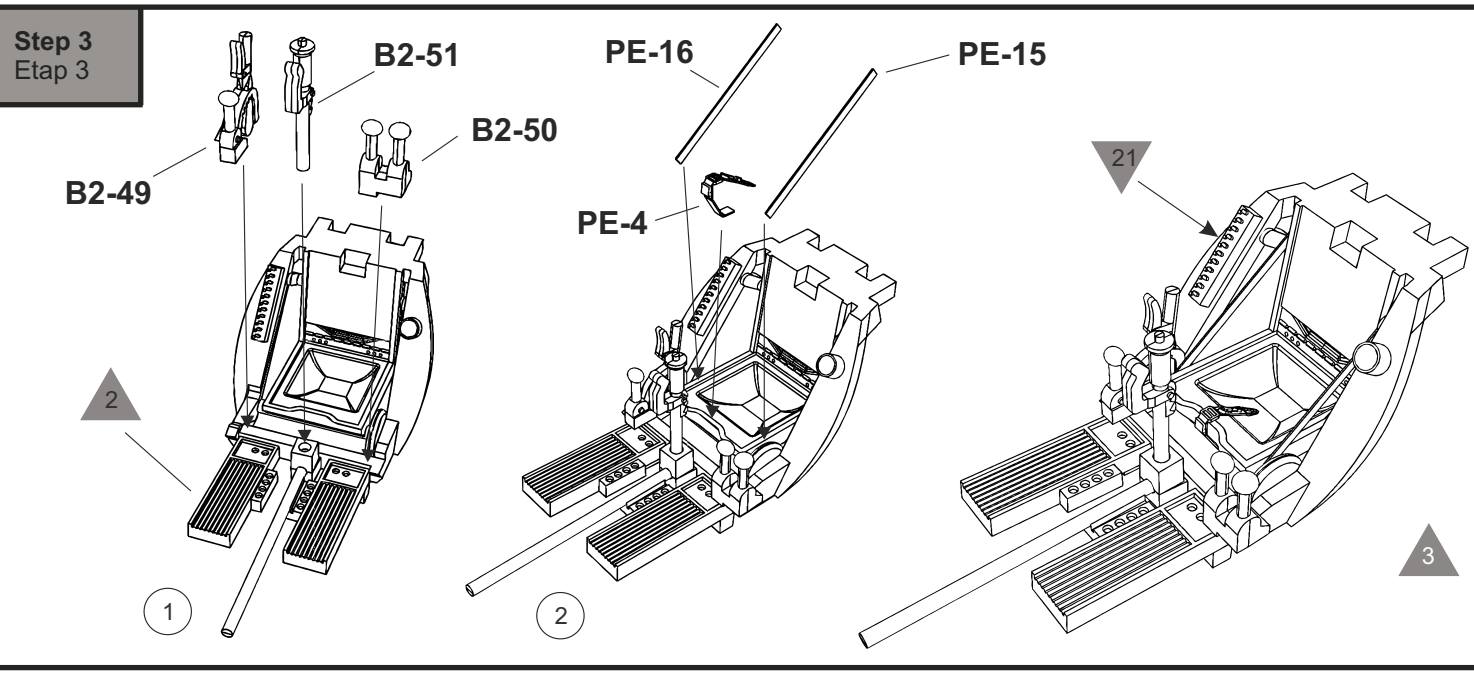

Step 4
Etap 4

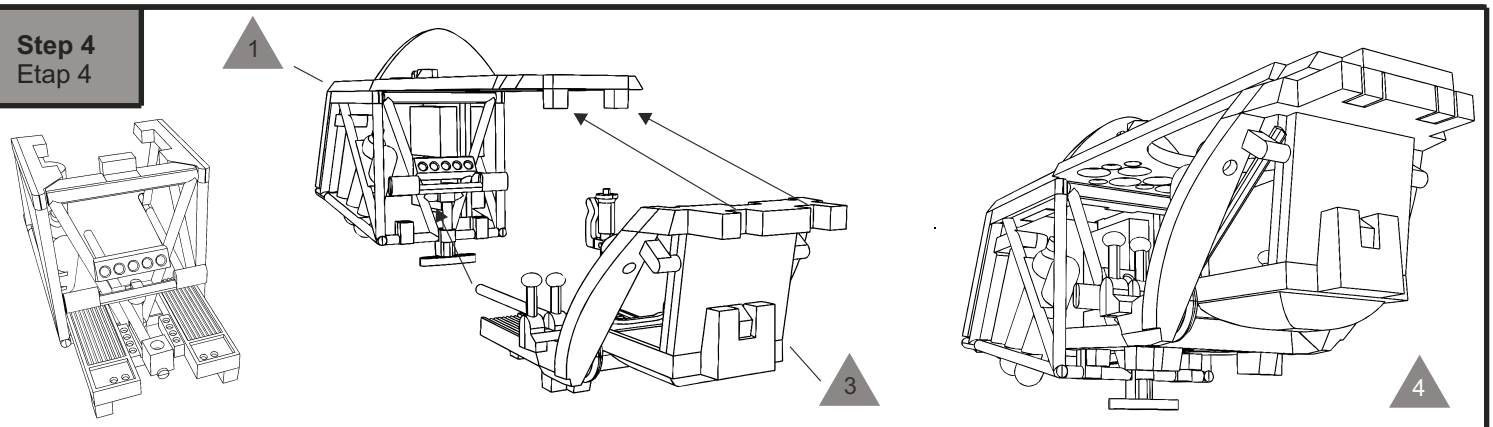

Step 5
Etap 5

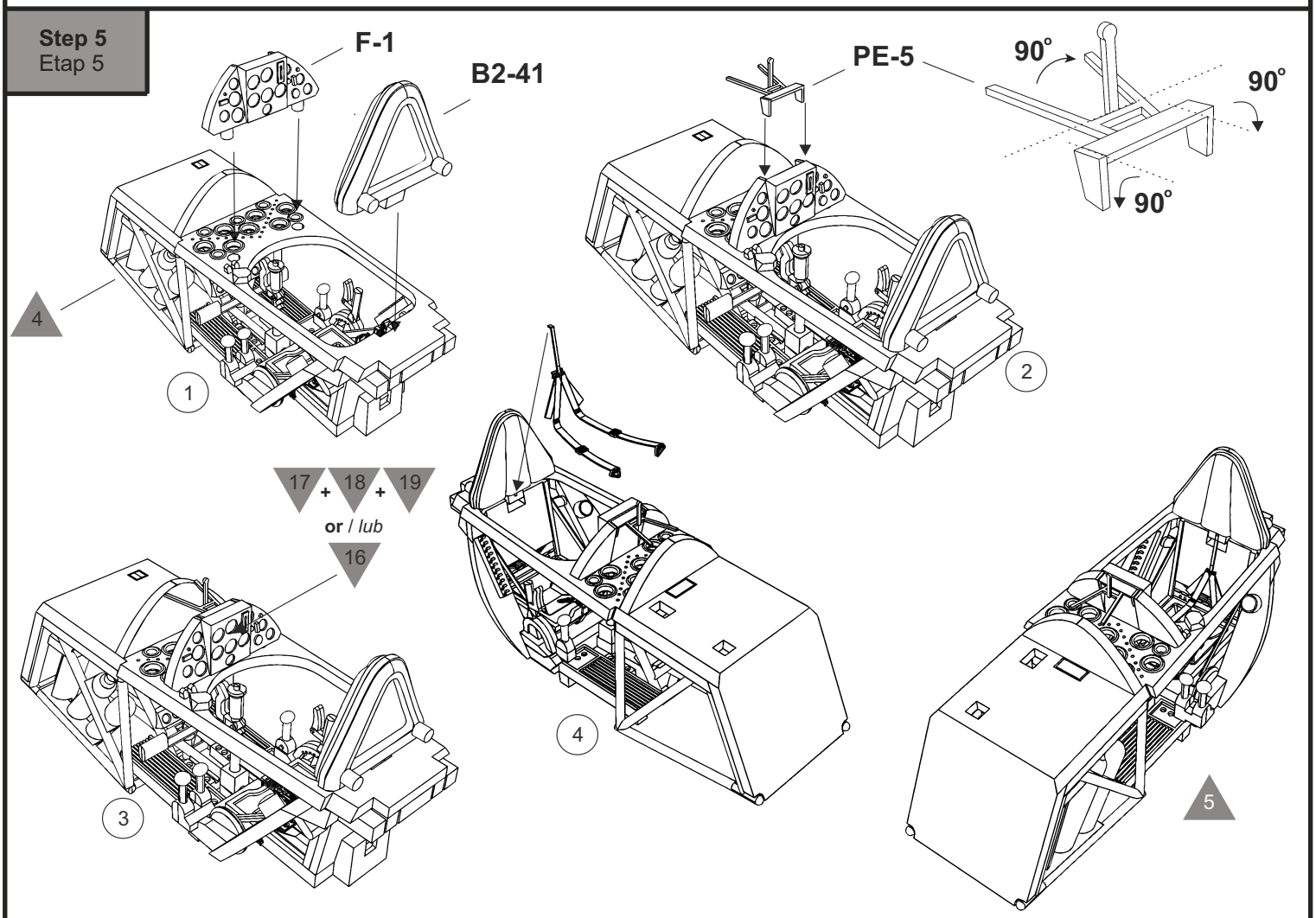

Step 6
Etap 6

For closed canopy only, see step 15a
Tylko dla kabiny zamkniętej, patrz etap 15a

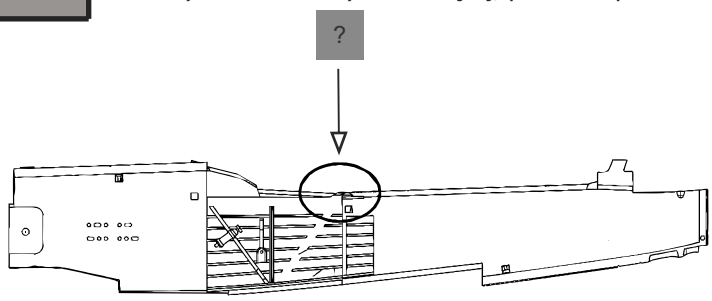

For closed canopy cut off on both fuselage sides
Dla kabiny zamkniętej, odetnij w obu połówkach kadłuba

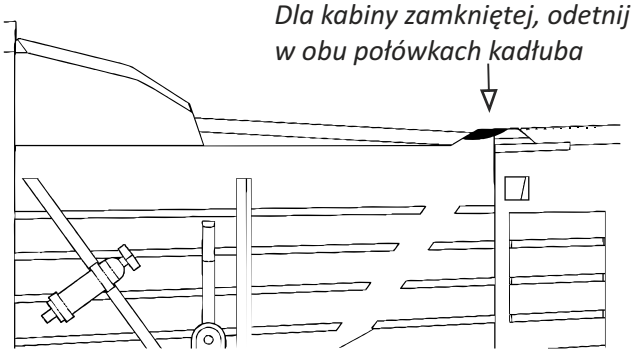

For open canopy (step 15b), please ignore step 6
Dla kabiny zotwartej (etap 15b), zignoruj etap 6

Step 7
Etap 7

Do not glue the halves together in this step
Nie sklejaj połówek na tym etapie

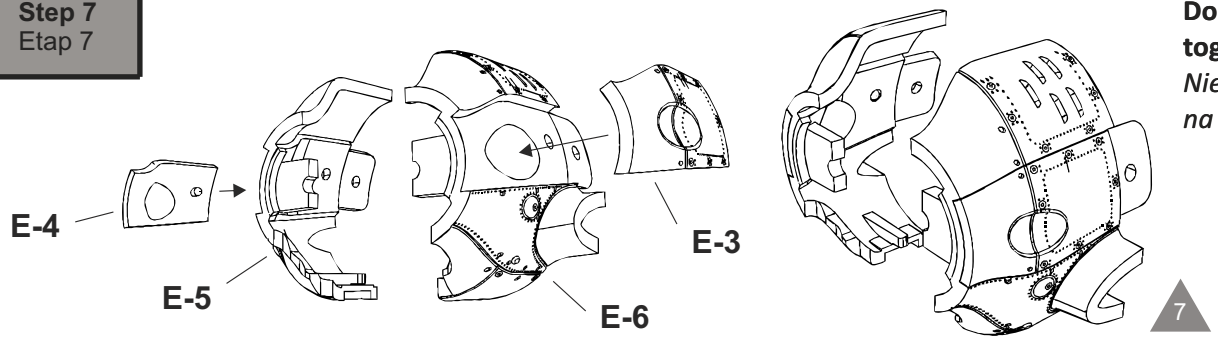

Step 8
Etap 8

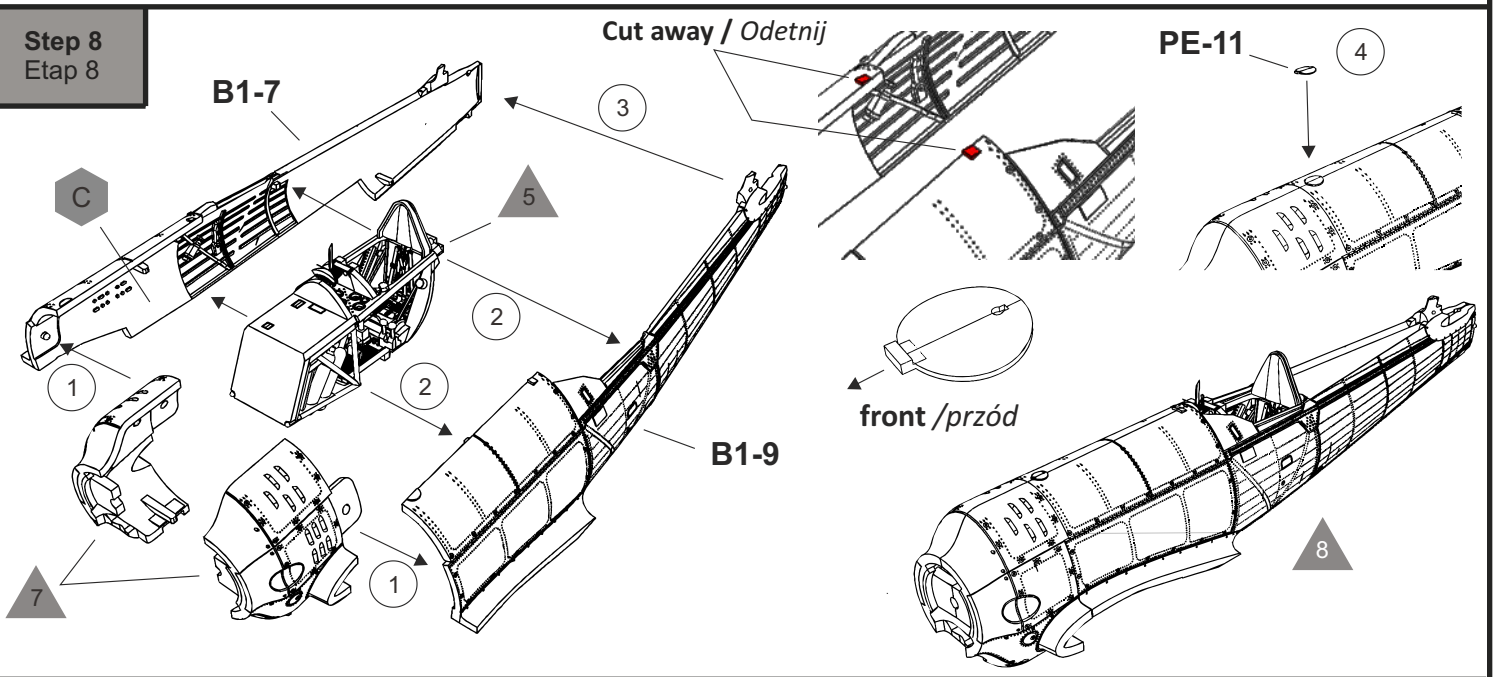

Step 9
Etap 9

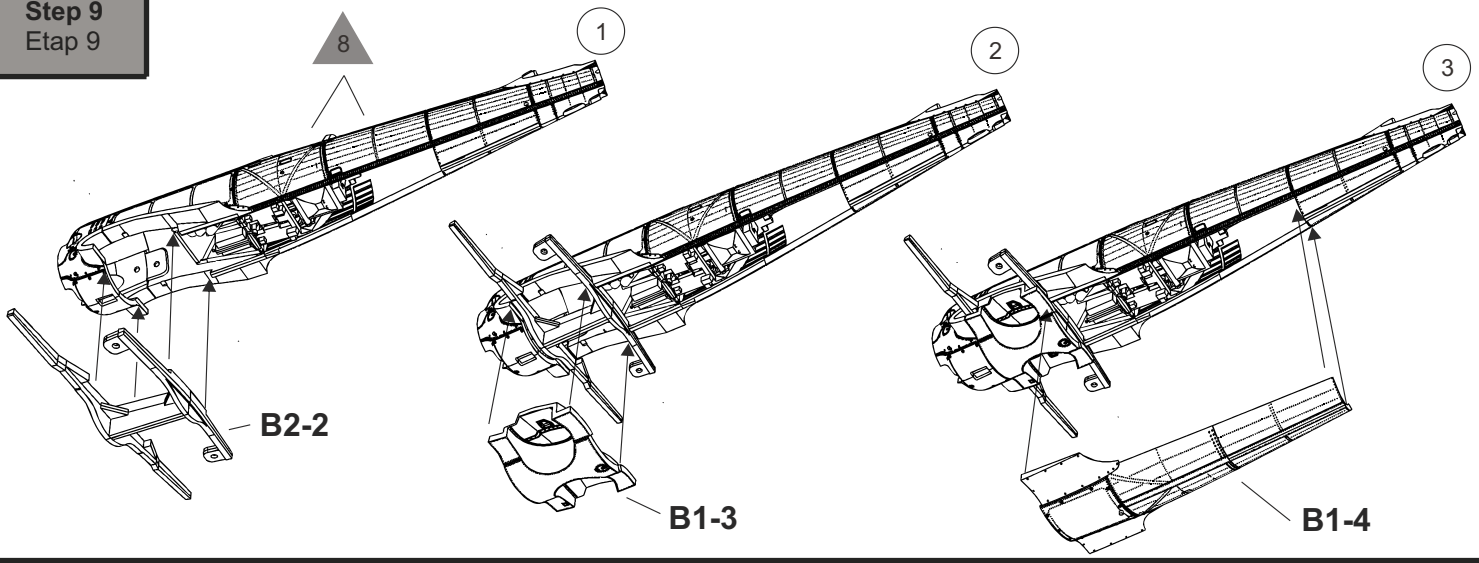

Step 10
Etap 10

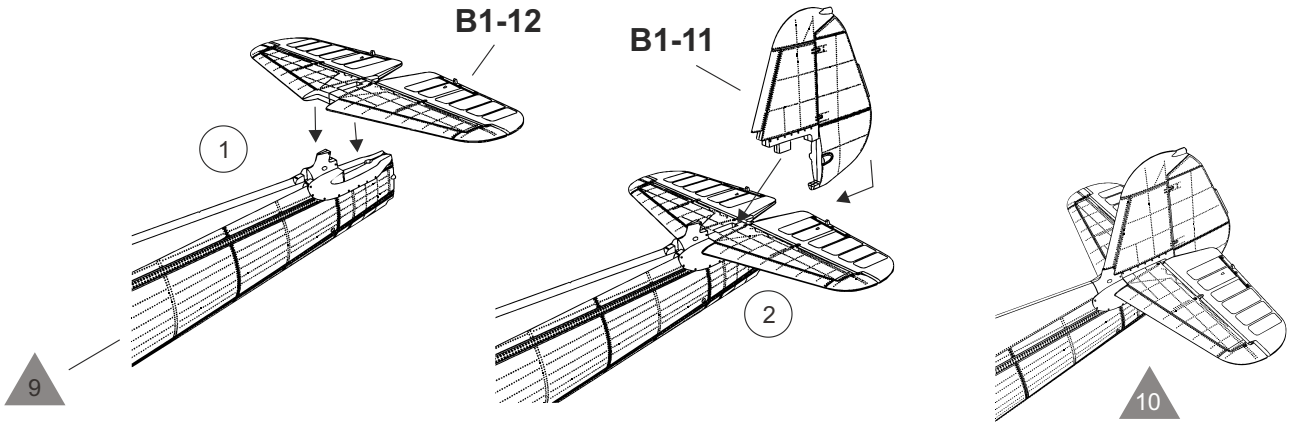

Step 11
Etap 11

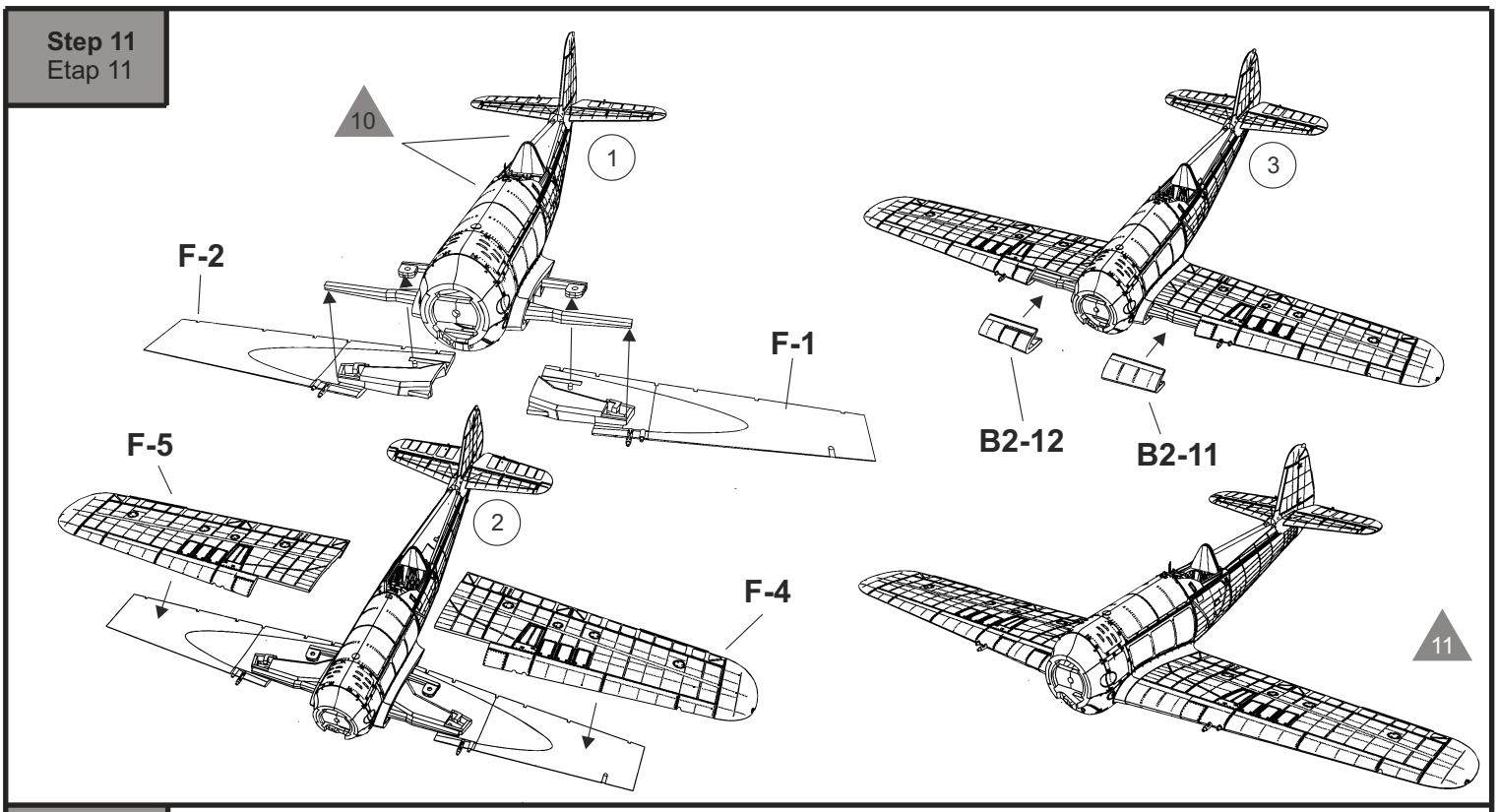

Step 12
Etap 12

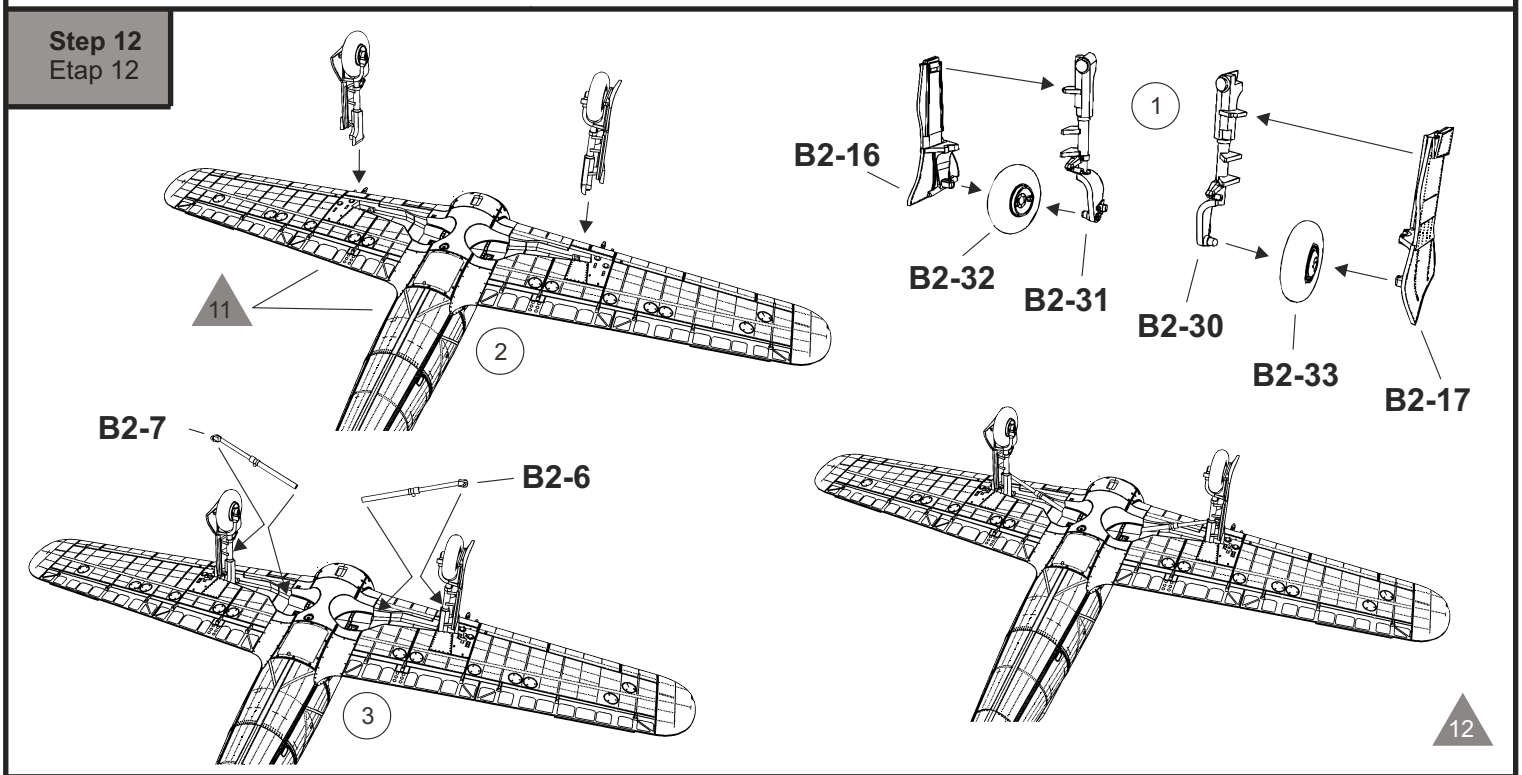

Step 13
Etap 13

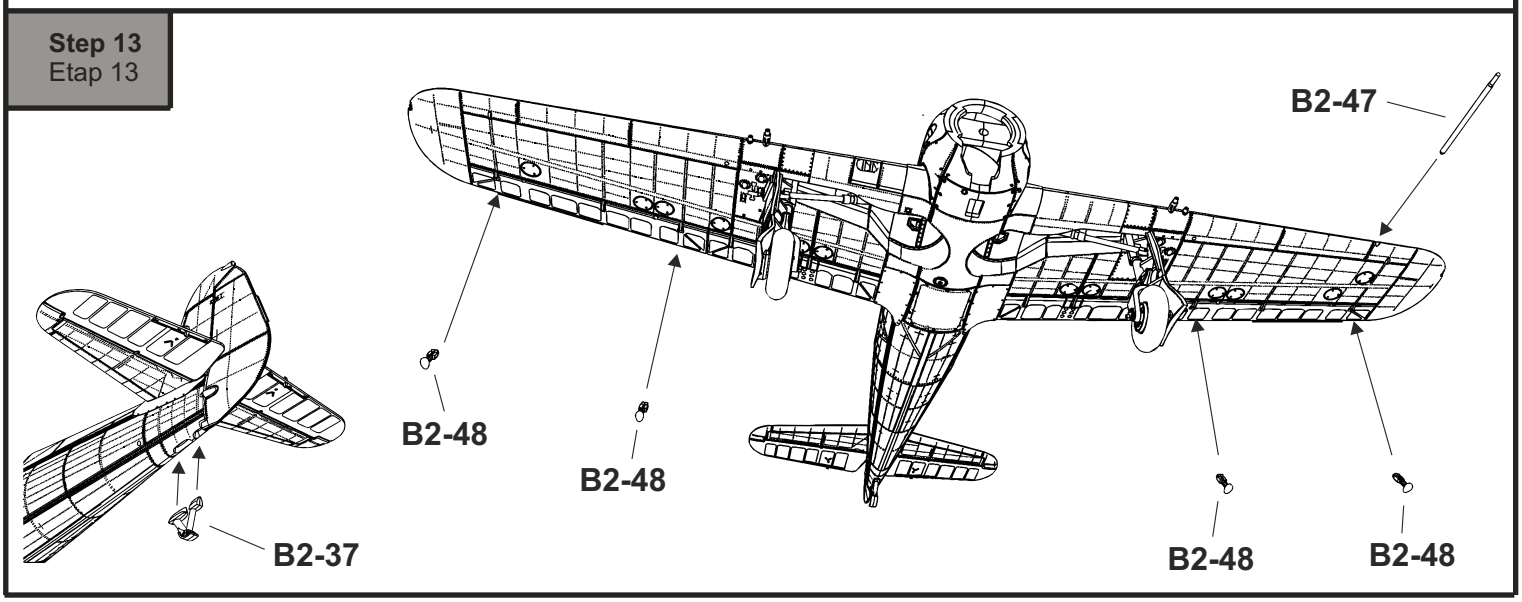

Step 14
Etap 14

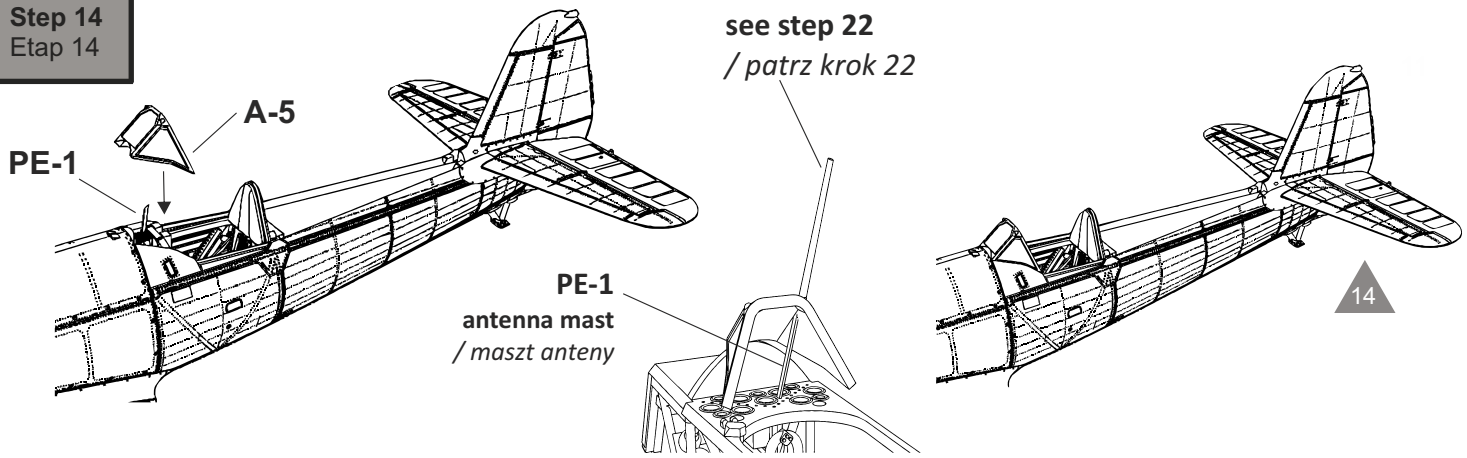

Step 15a
Etap 15a

?

Canopy closed
Kabina zamknięta

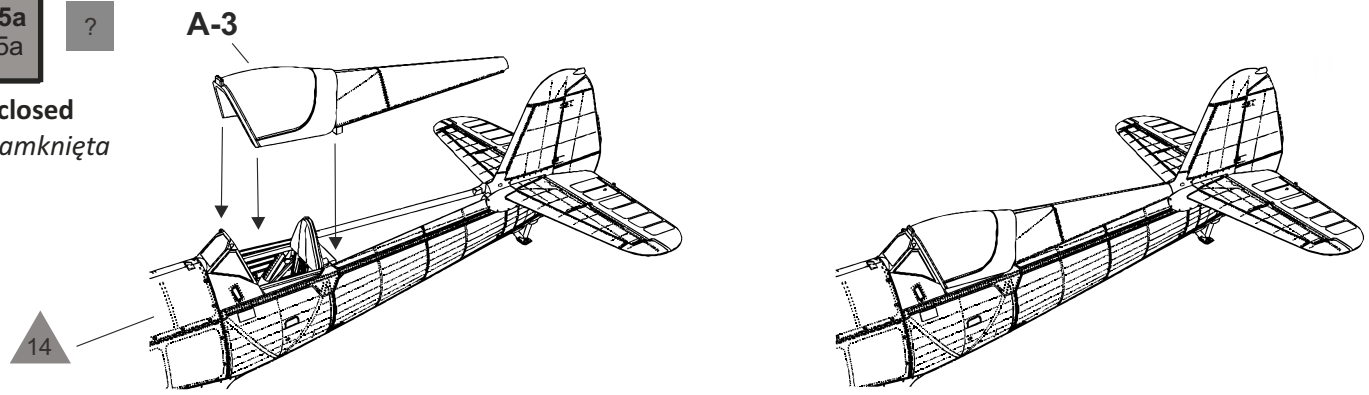

Step 15b
Etap 15b

?

Canopy open
Kabina otwarta

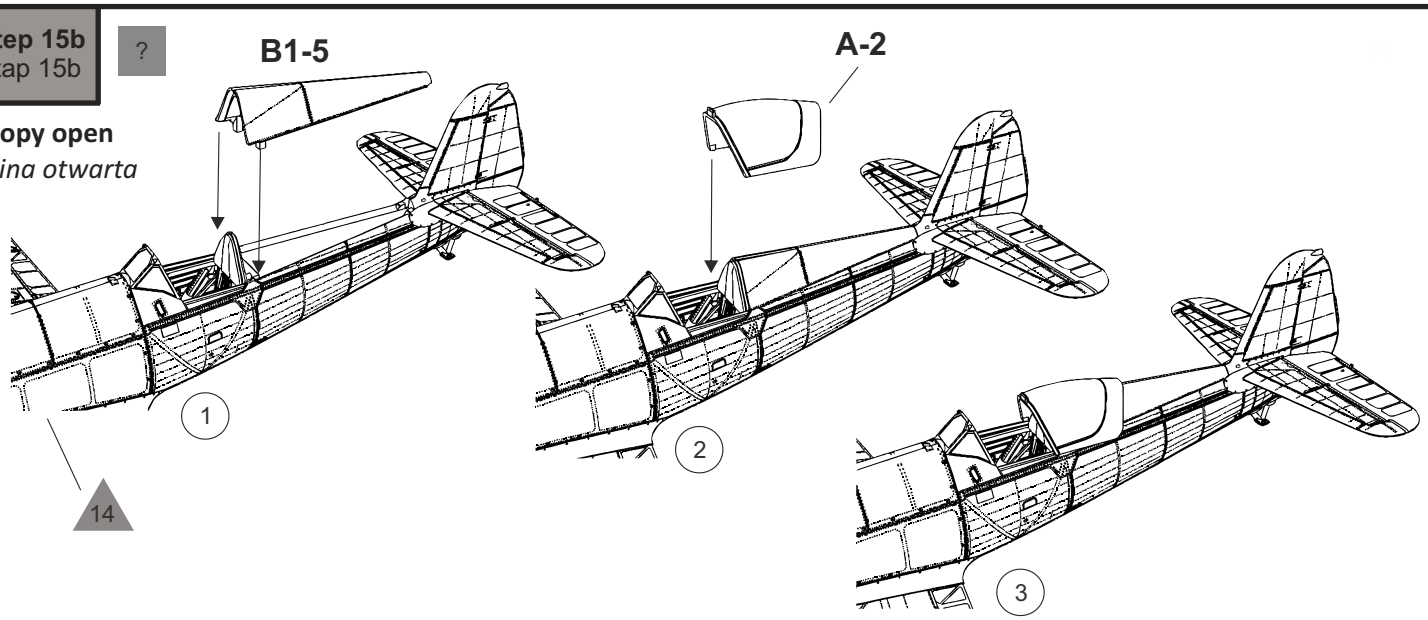

Step 16
Etap 16

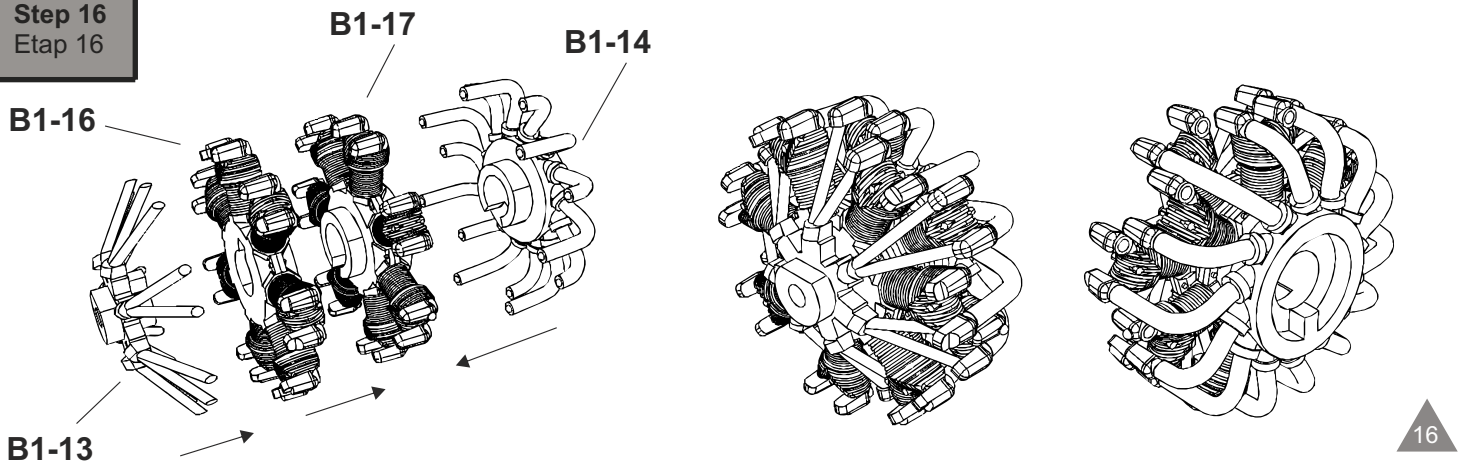

Step 17
Etap 17

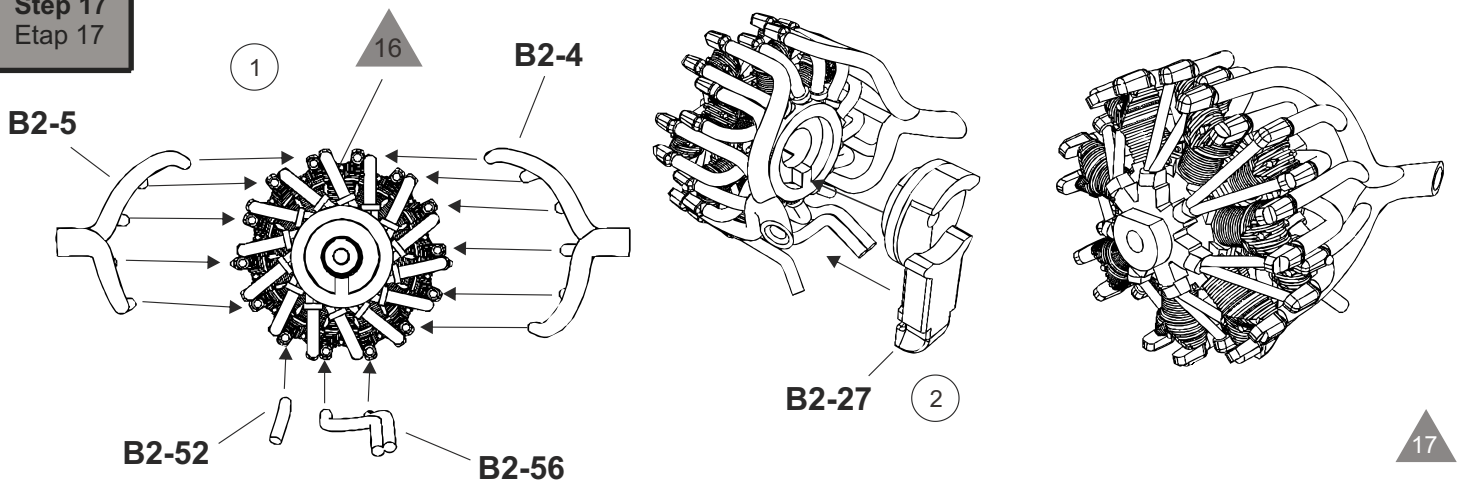

Step 18
Etap 18

Don't use glue for this part
/Nie używaj kleju dla tej części

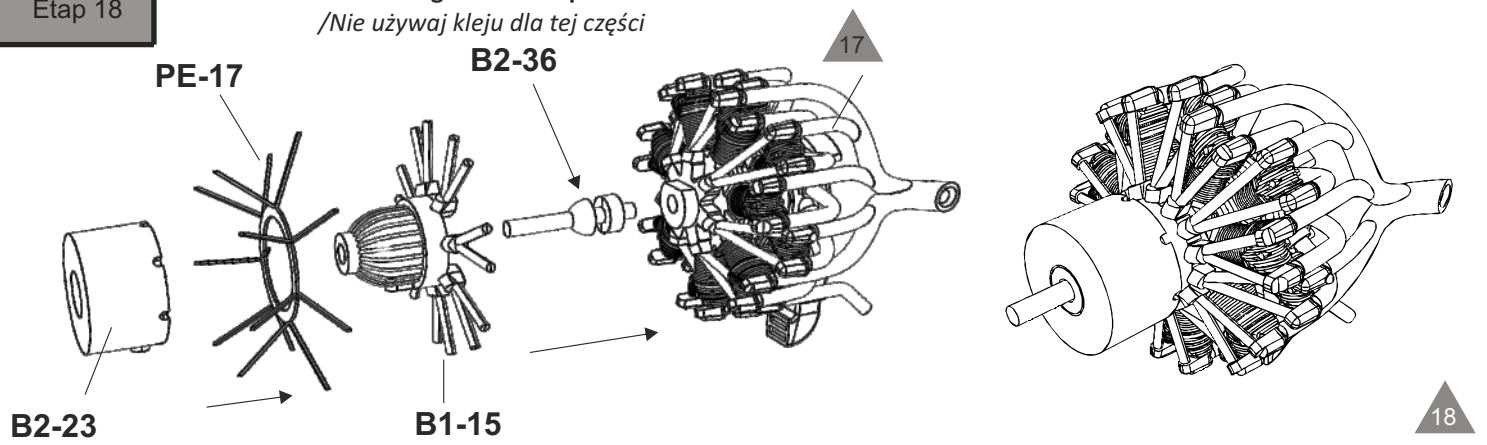

Step 19
Etap 19

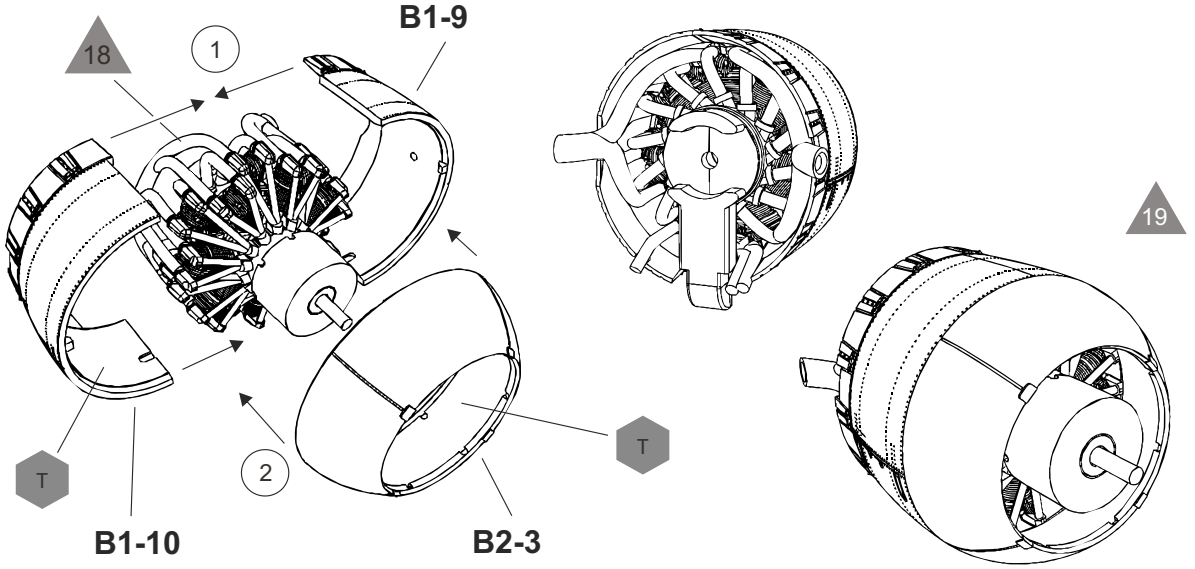

Step 20
Etap 20

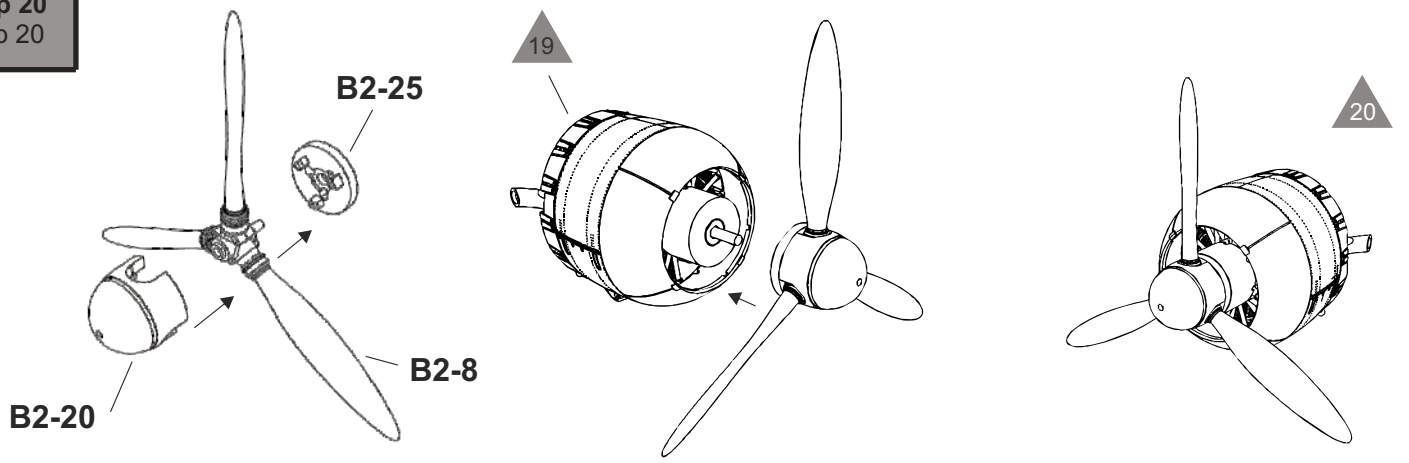

Step 21
Etap 21

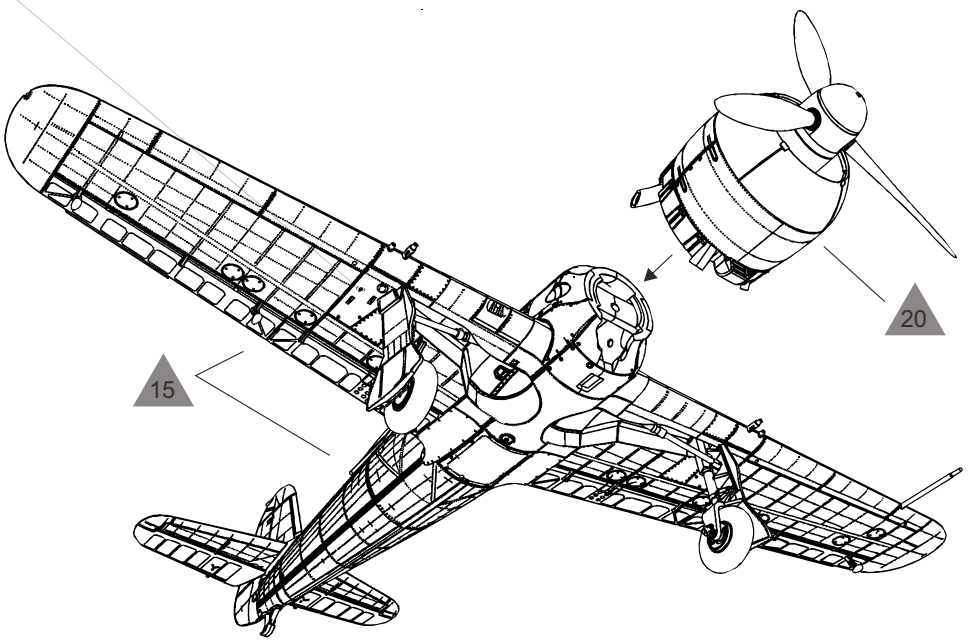

Step 22
Etap 22

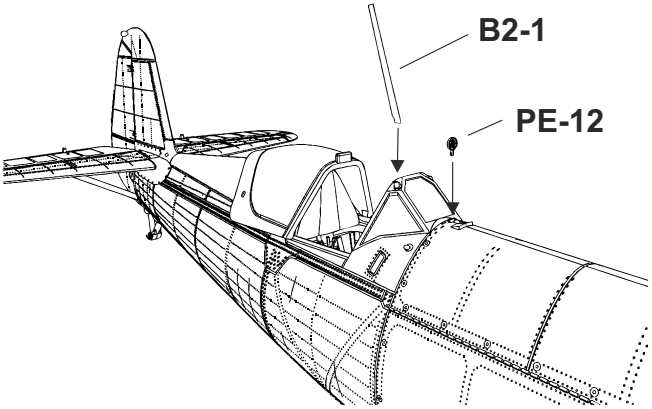

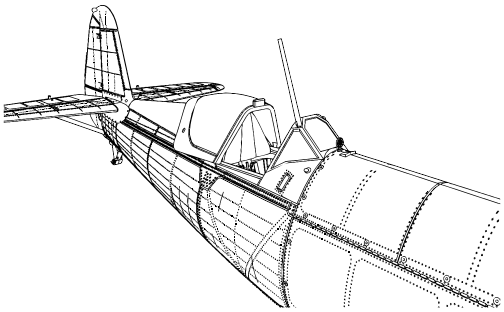

Step 23
Etap 23

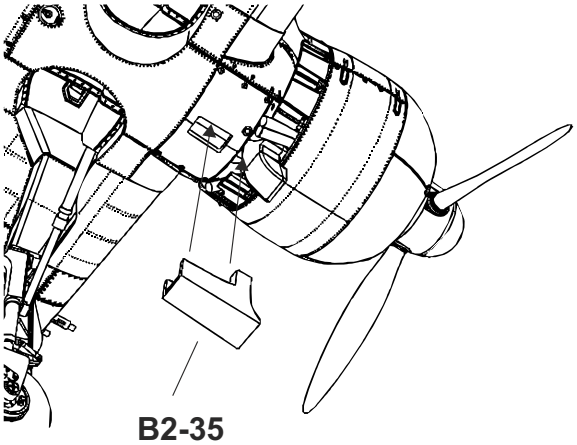

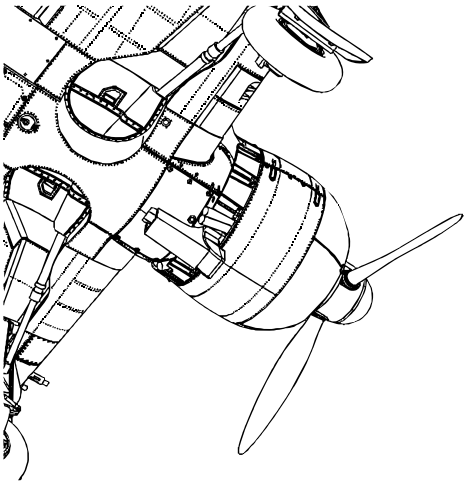

Antenna wire
Linka anteny

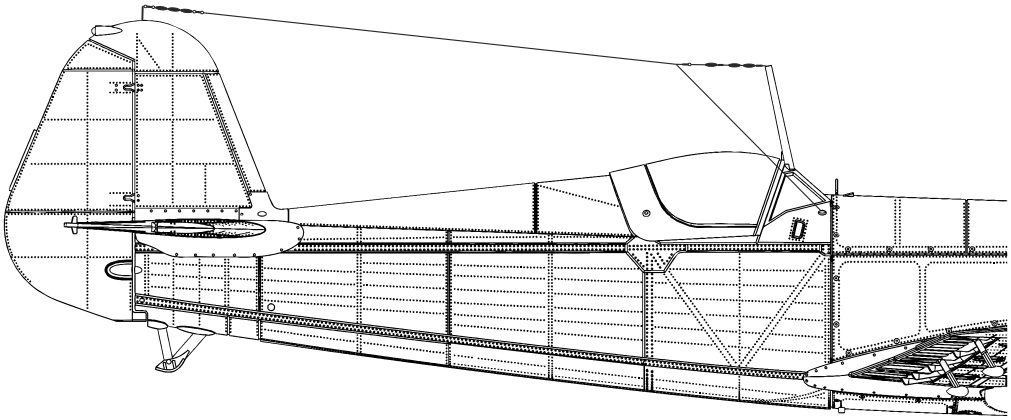

Optional - make an antenna wires
Opcjonalnie wykonaj linki anten

Stencils
Napisy Eksloatacyjne

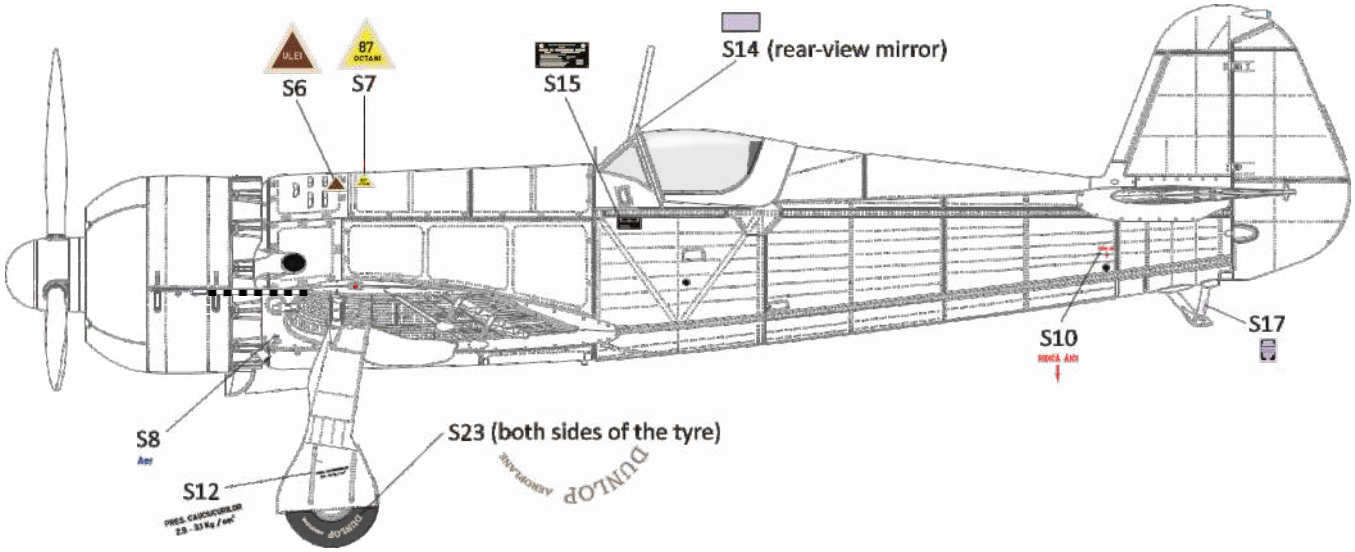

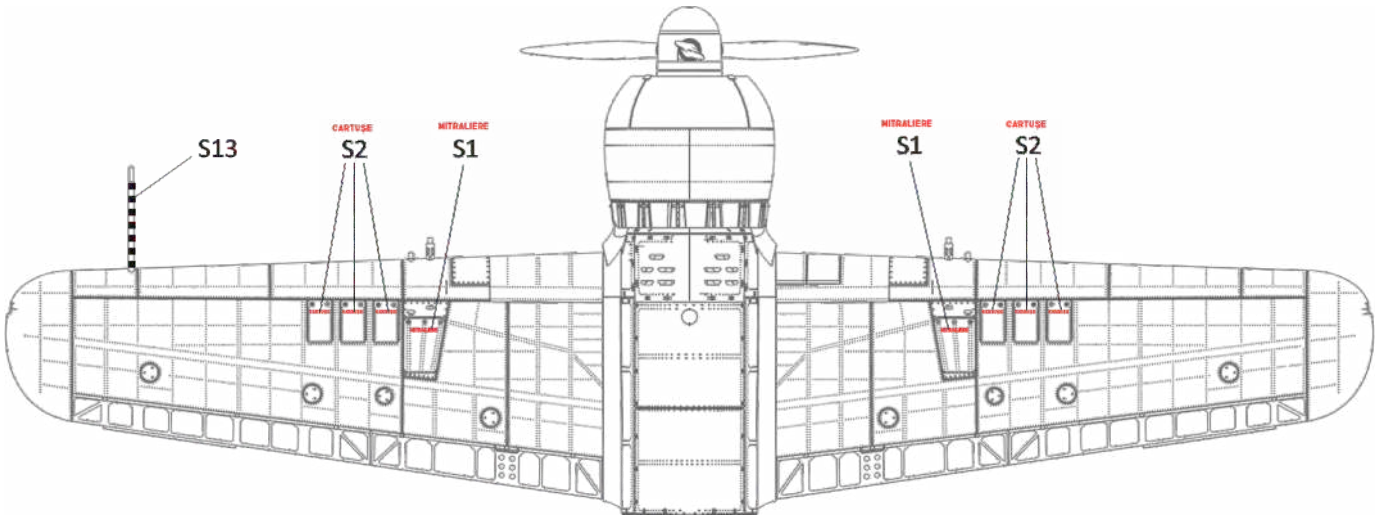

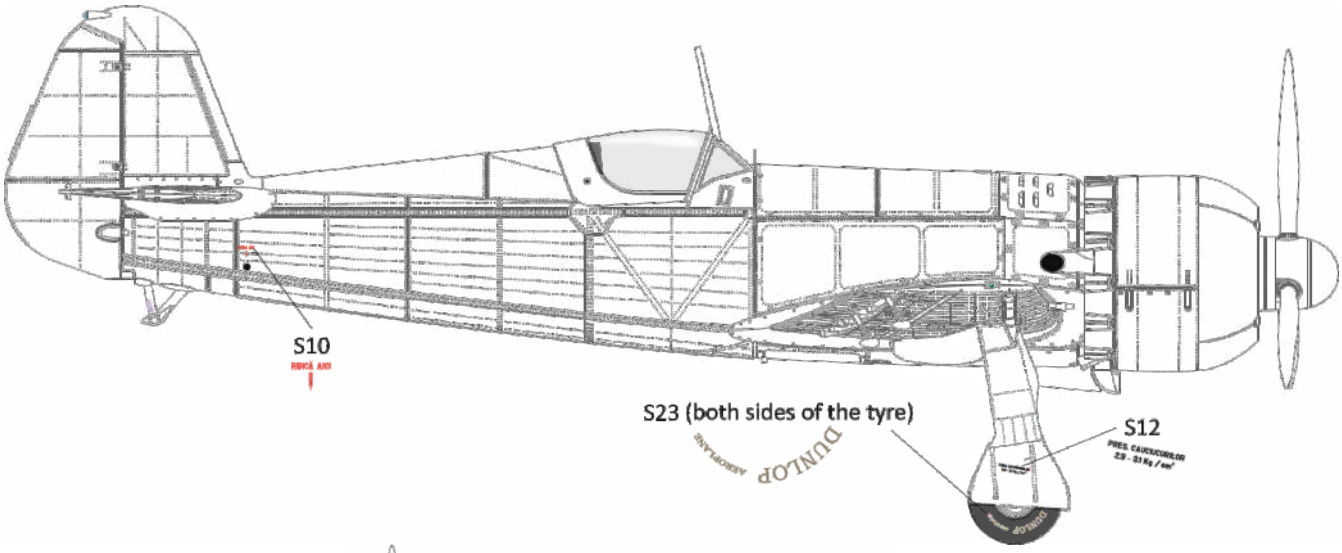

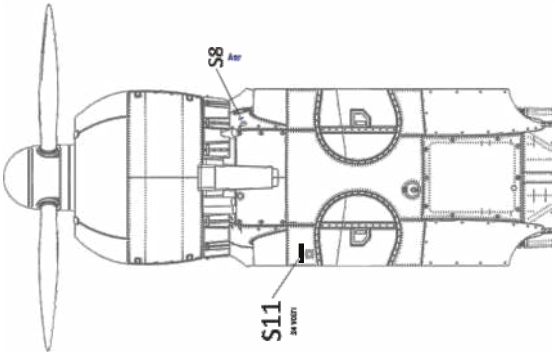

1

IAR.80 No.9, Grupul 8 Vânătoare, Târgşoru Nou airfield, early March 1941

One of the first IARs to enter service, No.9 left the factory in December 1940. It joined Grupul 8 Vânătoare, when the latter was constituted on 22nd February 1941 at Târgşoru Nou airfield in order to bolster the defence of strategically important Ploiesti oil fields (see also IBG model of P.11F - cat. no. 72522). At the time it carried the standard markings of early machines, with cockades on the wings and 25cm wide yellow bands on both the wings and the fuselage - the latter introduced in October 1940 as a recognition aid for German airplanes operating over Romania. Particularly interesting is the yellow spinner tip, introduced most likely for the same purpose and seen also on some other Romanian fighters (e.g. P.11c, Hurricane). The overall finish of the airframe was still relatively new and having visible lustre, with brown paint being slightly more matt than the green one.

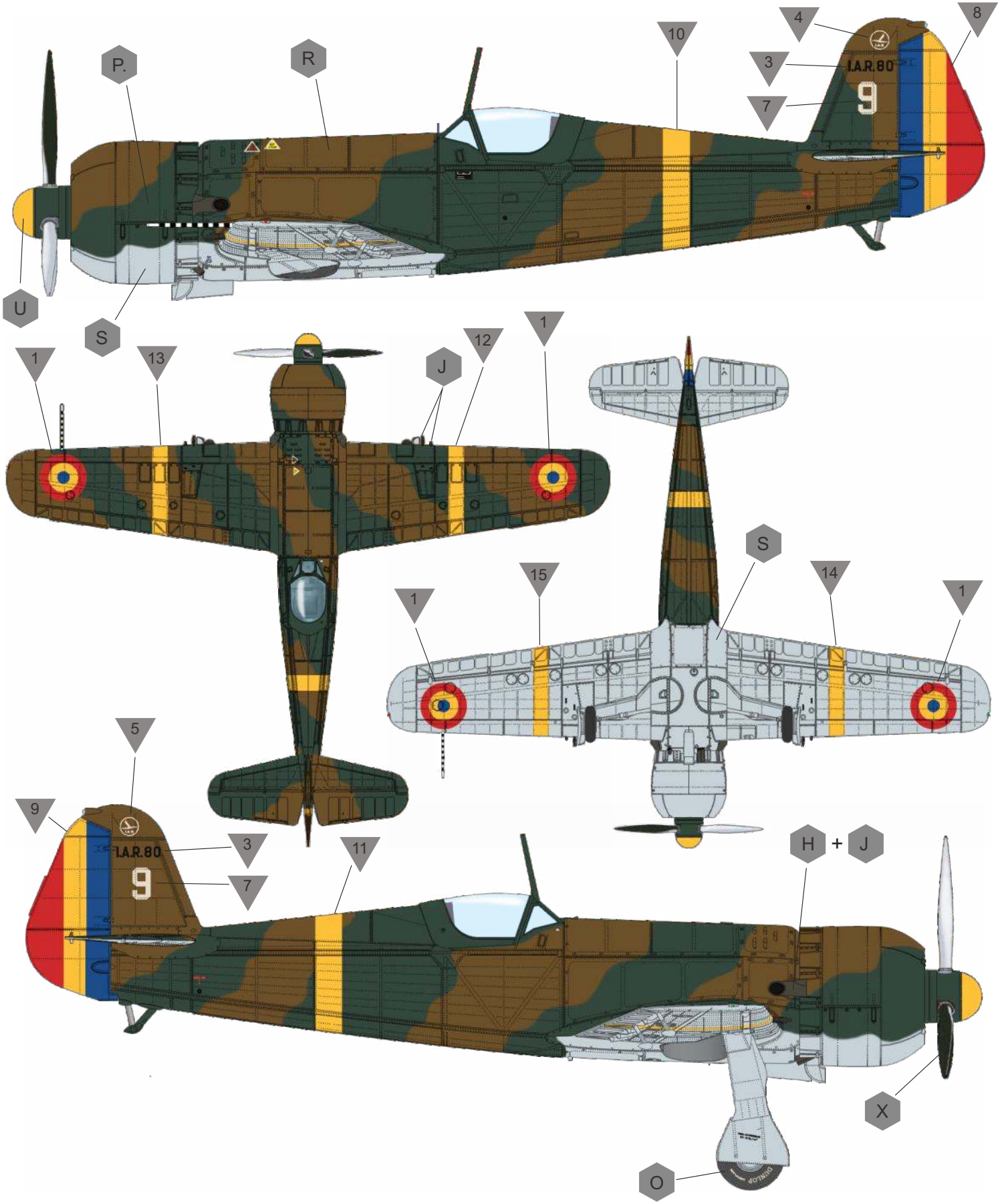

2

IAR.80 No.26, Industria Aeronautică Română (I.A.R.) factory airfield, Brașov, February 1941

Photographed at the edge of the Brașov airfield, No.26 offers very interesting insights into the finish of the early machines. It was still predominantly covered in the primer colour – Cerrux grund gris, produced under license of Cellon Ltd. by Romanian company Zimmer & Co. Only the fuselage fuel tank covers had not been painted yet and show the natural aluminium sheen. Fabric-covered surfaces are already in their target green and brown colours on top and light blue-gray on the undersurfaces – they were installed as ready components due to differences in the technology of finish in comparison with the metal surfaces. Camouflage colours were of Hexol brand – believed to be produced in Romania by either Coroana or Polychrom companies, and definitely differing in shades from the RAF colours, especially brown being much darker. The most interesting feature are the markings, however. Applied directly on the primer before the camouflage was applied. This was done both to save weight and ensure proper coverage of the lighter colours. Modellers willing to paint these elements themselves on camouflaged machines are advised to use similar approach.

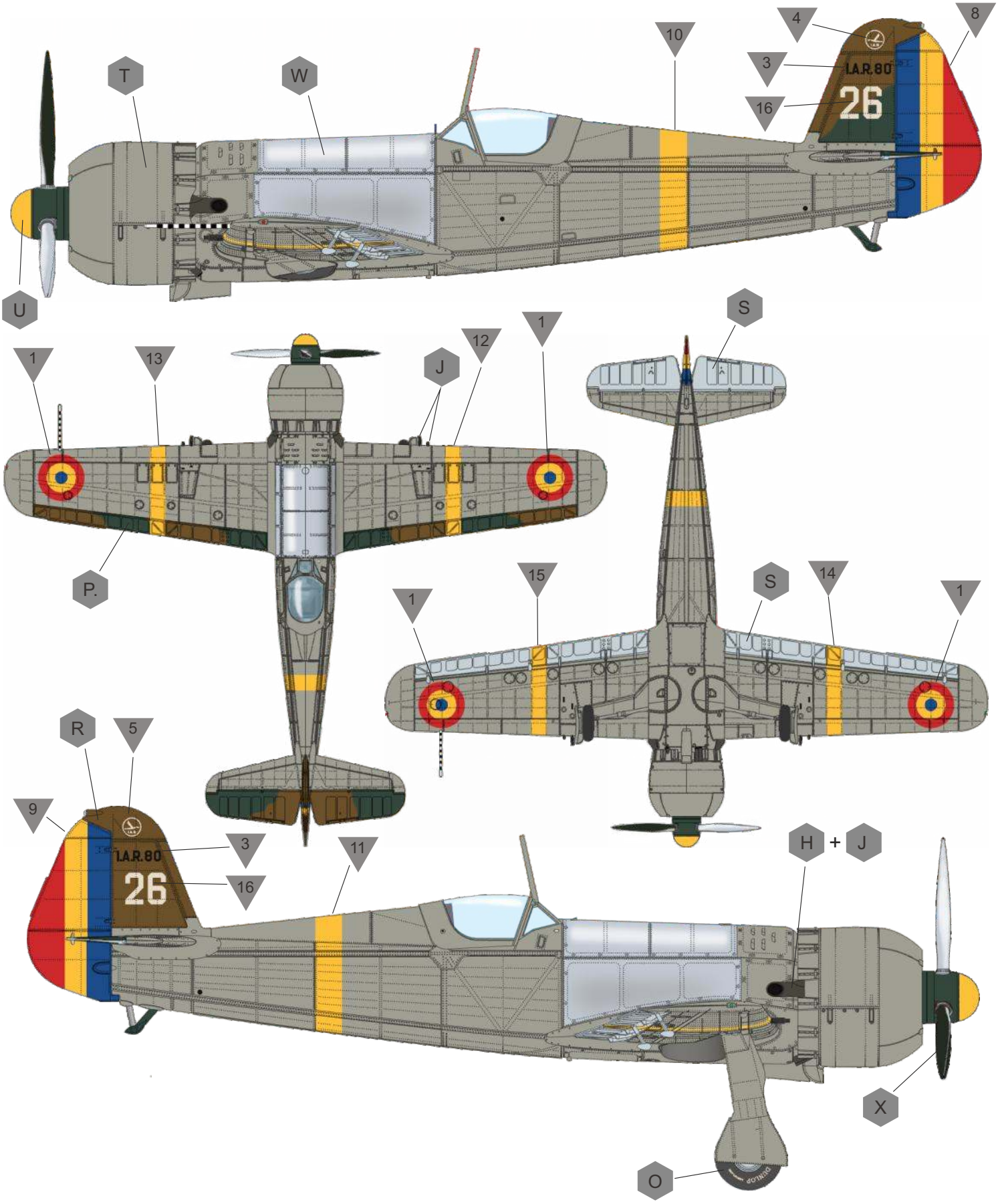

3

IAR.80 No.39, Grupul 8 Vânătoare, Pipera airfield, 10th May 1941

No.39 entered service in late March or early April 1941, joining Grupul 8 Vânătoare at Târgşoru Nou airfield. On 1st May of that year an order (Nota No. 3798) introduced crosses in place of cockades, the latter were described as too similar to British roundels. New marking were to be applied immediately with no airplane expected to fly without them starting from 7th May. However, its implementation was plagued with misunderstandings – at one point the order mentioned replacement of cockades (applied until then only on the wings) and only near the end of the text stipulating application of the crosses also to the fuselage. It is no wonder that in case of IARs they were initially applied only to the wings (as was the case e.g. on PZL fighters). Their placement was now closer to the airplane centreline, leaving overpaint marks where cockades used to be. On 10th May 1941, Gr. 8 Vt. participated with 24 IAR.80 airplanes in the air parade over București on the occasion of Monarchy Day (Ziua Regalității). It is believed for that purpose they were rebased to Pipera airfield, where a well-known series of colour photos was taken. They show the airplanes with entire cowlings and spinners overpainted in yellow. However, the most interesting element visible in the photos are the yellow wingtips. Their purpose is not entirely clear – either they were introduced to align the quick identification markings with German airplanes operating at this time in Romania and over entire Balkan peninsula or they were used as a formation-forming aid for the aforementioned parade only.

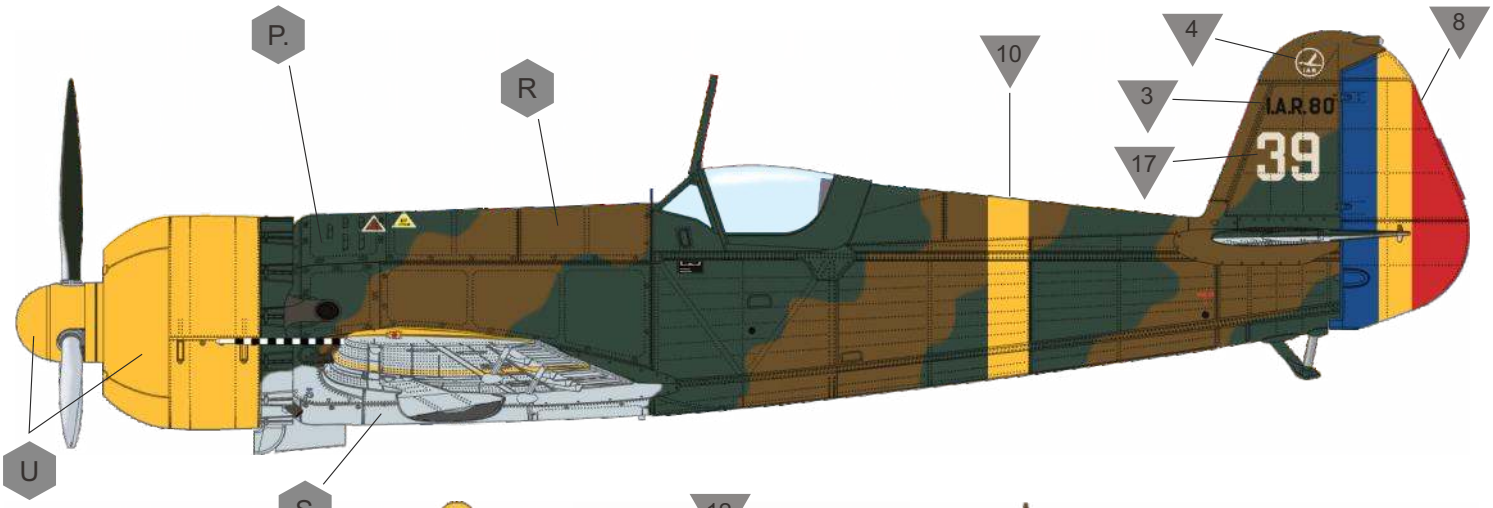

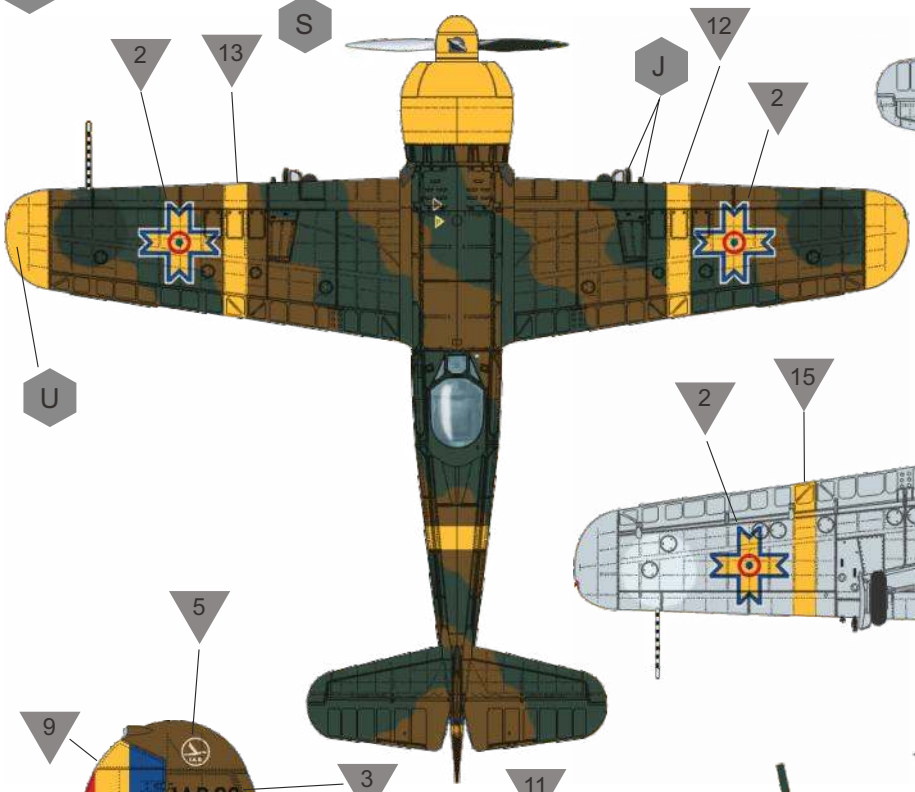

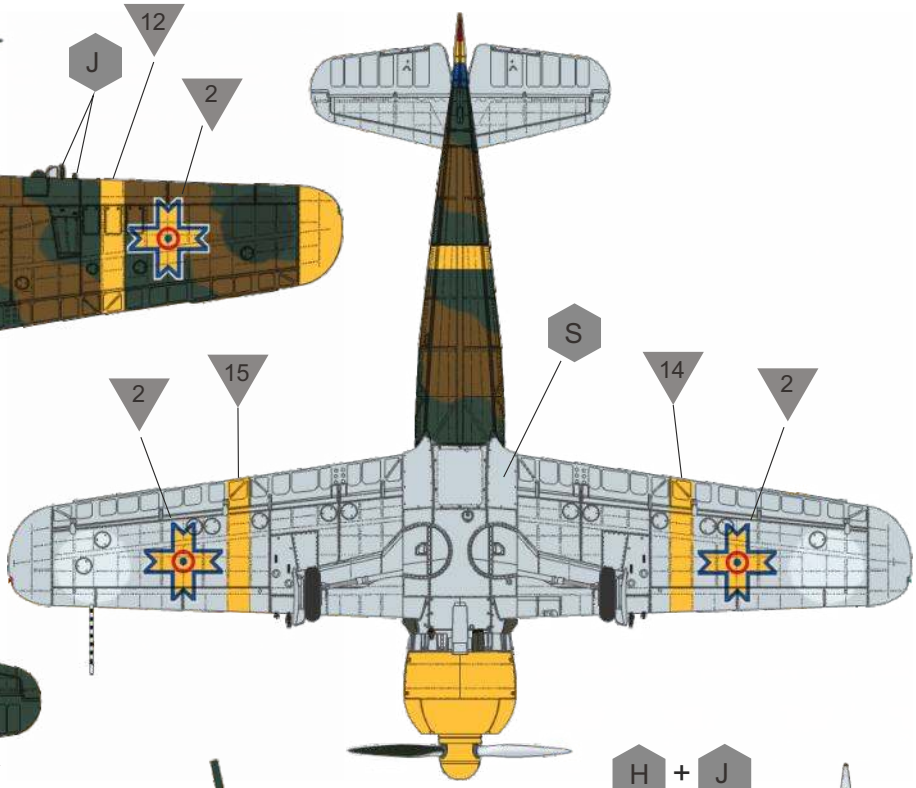

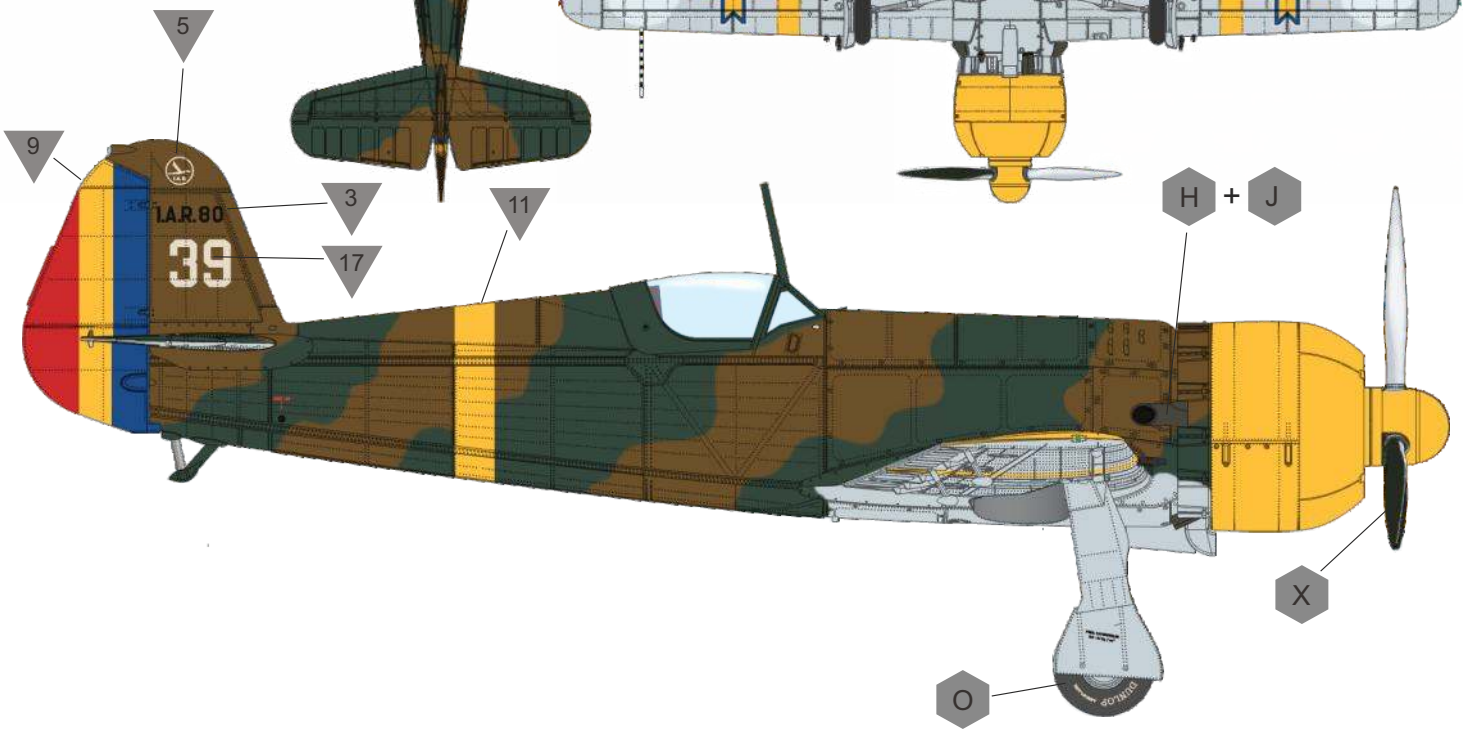

ALSO AVAILABLE FROM IBG MODELS

IAR 80 Pilot's seat with seatbelts (Early)
3d Printed set for all IBG Models IAR 80/81 kits

I.A.R.80/81 early wheels (used until 1943)
3d Printed set for the all IBG Models I.A.R. 80/81 kits

I.A.R.80/81 Exhausts
3d Printed set for the all IBG Models I.A.R. 80/81 kits

ROMANIAN BARBAROSSA 2 in 1: P.11F and PZL 23A 1:72 72530

PZL/IAR P.11F Romanian Fighter on skis 1:72 72522

PZL P.11B Early (K-series) 1:72 72552

PZL.37 B Łoś in Romanian Service 1:72 72516